BOSTON PUBLIC LIBRARY
3 9999 06720 496 4

RECEIVED
FEB 07 2007
SOCIAL SCIENCE

TRACY / BRADY

The Royal Ancestors and Descendants of Joseph Augustus Brady III of Boston and North Reading, MA

VOLUME TWO

American Line of Descent Generation 47 Through 59

McMinnville, TN

2007

CS
71
.T76
2007x
v.2

Research Library

GENEALOGICAL ORGANIZATION:

This FAMILY HISTORY/GENEALOGY is NOT written for those who are alive today but it IS written for those of our FUTURE GENERATIONS, who may wish to know something about their ANCESTORS, after we are gone. I regret that I did not question my older relatives, while they were alive. I have lived to regret it. The information is no longer available. Should Future Generations be able to acquire a copy of this FAMILY HISTORY/GENEALOGY, perhaps they may be able to learn something about their Heritage, without the Effort and Research that I and others were required to expend, to acquire the enclosed information. I would recommend that a copy of this information be provided to each of your Descendants. It has been said that -"One can not know where one is going, unless, One knows from whence One came". AMEN

THE FOLLOWING NOTES APPLY THROUGHOUT:

A. ONLY DIRECT, BY BLOOD, ANCESTORS/DESCENDANTS and their SPOUSES will be PEDIGREED.

B. The GENERATION NUMBER consists of TWO PARTS:

   PART ONE - The GENERATION NUMBER, applicable to this GENEALOGY, ONLY.
   PART TWO - The ORDER OF BIRTH, of the INDIVIDUAL SHOWN, if KNOWN.

C. ALL UNKNOWNS are left BLANK.

D. ALL DIRECT, BY BLOOD, ANCESTORS/DESCENDANTS, will be "CAPITALIZED".

E. ALL DIRECT, BY BLOOD, ANCESTOR/DESCENDANT SPOUSES will retain the SAME GENERATION NUMBER but may have their own ORDER OF BIRTH NUMBER, if KNOWN.

F. ALL PEDIGREE'S will be FILED by GENERATION NUMBER.

G. ALL DATES are expressed NUMERICALLY by YEAR/MONTH/DAY, except in the TEXT.

H. ALL DATES GIVEN are ASSUMED to be per the CALENDAR in effect, at that TIME

I. ALL ROMAN NUMERALS are used to differentiate between INDIVIDUALS with the SAME NAME AT BIRTH and need not be of HISTORIC SIGNIFICANCE.

J. A QUESTION MARK (?) indicates that the preceeding Date or INFORMATION, MAY or MAY NOT be ACCURATE, it may be an ASSUMPTION or an APPROXIMATION.

K. An ASTERISK (*) indicates an IMMIGRANT ANCESTOR/DESCENDANT.

PERMISSION is GRANTED, to REPRODUCE this HISTORY/GENEALOGY, in WHOLE or in PART, for any LEGITIMATE PURPOSE. PLEASE - Acknowledge me, as your SOURCE.

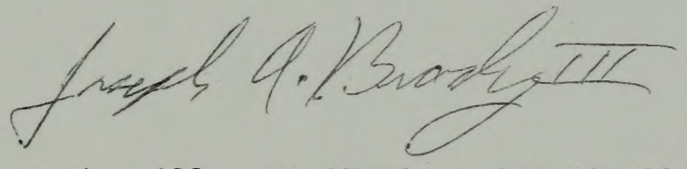

JOSEPH A. BRADY III, 630 Sunburst Drive, McMinnville, TN 37110 1-931-507-8964

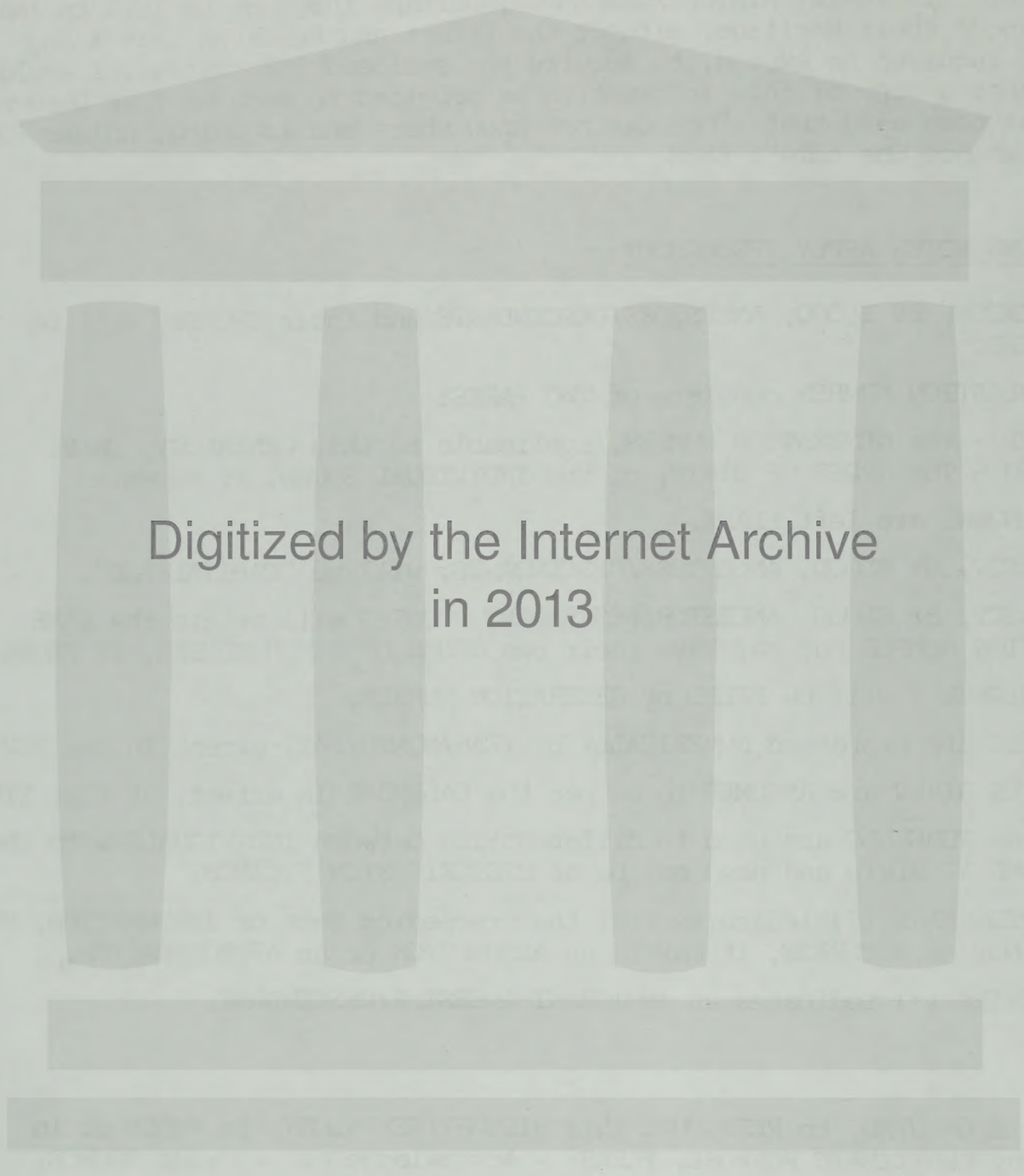
Digitized by the Internet Archive
in 2013

http://archive.org/details/tracybradyroyala02brad

LISTING OF: DIRECT, BY BLOOD, ANCESTORS/DESCENDANTS
AMERICAN LINE OF DESCENT
YEARS: From 1610---- Thru 20060214

GENERATION: 47-18
ISSUED: 20060214

BORN	ANCESTOR/DESCENDANT	BORN	SPOUSE	MARRIED
	Fourty Sixth Generation CONTINUED FROM VOLUME ONE			
	Fourty Seventh Generation			
1610	TRACY, THOMAS II * LIEUT.		, MARY *	1641 ?
	Fourty Eighth Generation			
1646	TRACY, JONATHAN I REVEREND	16560826	GRISWALD, MARY	16720711
	Fourty Nineth Generation			
16800501	TRACY, CHRISTOPHER I	16870420	PARISH, LYDIA	17050520
	Fiftyith Generation			
17200111	TRACY, DOROTHY	17201021	LEE, ISRAEL I	17431207
	Fifty First Generation			
17520713	LEE, DAN I		, DESIRE	1780 ?
	Fifty Second Generation			
1782 ?	LEE, NEHEMIAH I		, BETSEY M	1820 ?
	Fifty Third Generation			
1823 ?	LEE, ORLANDO BRIDGES I	18280127	GASKILL, MARY ELIZABETH	18570527
	Fifty Fourth Generation			
18621129	LEE, CLARA/CARRIE	18570723	SMITH, REVILLO NEHEMIAH I	18821109
	Fifty Fifth Generation			
18830823	SMITH, FLORENCE DILLABY	18800302	TWEED, WILLIAM HARRISON I	19040615
	Fifty Sixth Generation			
19110118	TWEED, ALMA GIBSON	19050527	BRADY, JOSEPH AUGUSTUS II	19280804
	Fifty Seventh Generation			
19290106	BRADY, JOSEPH AUGUSTUS III	19310818	JAMESON, CLAIRE ELSIE	19540704
	Fifty Eighth Generation			
	Fifty Nineth Generation			
	Sixtyith Generation			
	Sixty First Generation			

LIEUTENANT THOMAS II * and his Wife MARY * ( ) TRACY, are the IMMIGRANT ANCESTORS (*) to the NORTH AMERICAN COLONIES, of this AMERICAN LINE OF DESCENT.

ALL, DIRECT, by Blood, DESCENDANTS of WILLIAM HARRISON TWEED I, in the Fifty Fifth Generation, are DIRECT, by Blood, DESCENDANTS of, atleast, NINETEEN (19) MAYFLOWER PASSENGERS, to PLYMOUTH COLONY, in 1620.

PEDIGREE OF: TRACY, THOMAS II * LIEUTENANT GENERATION: 47-18
BORN AT: STANWAY MANOR, GLOUCESTERSHIRE, ENGLAND ISSUED: 20060210
DIED AT: NORWICH, CT
BURIED AT:

GEN.	STATUS	ANCESTORS/DESCENDANTS		BORN	MARRIED	DIED
45-	GRANDFATHER:	TRACY, RICHARD III	ESQUIRE			1569
45-	GRANDMOTHER:	LUCY, BARBARA	LADY			
46-05	FATHER:	TRACY, SIR PAUL I	13th BARONET	1565 ?	Twice	1628
45-	GRANDFATHER:	SHARKERLEY, RAFFE/RALPH				
45-	GRANDMOTHER:	RADCLIFF, ALICE			Twice	
46-	MOTHER:	SHARKERLEY, ANNE	LADY	1570 ?	1586 ?	1615
47-01	Brother:	Tracy, Richard IV		1587 ?	1618 ?	
47-02	Sister:	Tracy, Elizabeth II	Lady			
47-03	Sister:	Tracy, Hester II	Lady			
47-04	Brother:	Tracy, Paul II	Esquire			
47-05	Sister:	Tracy, Susan II	Lady		N/A	Young
47-06	Sister:	Tracy, Barbara	Lady			
47-07	Sister:	Tracy, Susanna	Lady			
47-08	Brother:	Tracy, Alexander I				
47-09	Sister:	Tracy, Alice III	Lady			
47-10	Sister:	Tracy, Lucy I	Lady			
47-11	Sister:	Tracy, Margaret II	Lady			
47-12	Brother:	Tracy, Sharkerley I				
47-13	Sister:	Tracy, Susan III	Lady			
47-14	Brother:	Tracy, Saunders I				
47-15	Brother:	Tracy, Nathaniel II			N/A	Young
47-16	Brother:	Tracy, William X				
47-17	Brother:	Tracy, Nathaniel III				
47-18	SUBJECT:	TRACY, THOMAS II *	LIEUTENANT	1610	Thrice	16851107
47-19	Brother:	Tracy, John IV				
47-20	Brother:	Tracy, Viscessimus I				
47-21	Sister:	Tracy, Anne	Lady			
47-	WIFE 1st:	, MARY *			1641 ?	1670 ?
48-01	Son:	Tracy, John V		1642	16700610	17020816
48-02	Son:	Tracy, Thomas III		1644		
48-03	SON:	TRACY, JONATHAN I	REVEREND	1646	16720711	17040225
48-04	Daughter:	Tracy, Mariam I		1648	1668 ?	
48-05	Son:	Tracy, Solomon I		1651	Twice	1728 ?
48-06	Son:	Tracy, Daniel I		1652	N/A	16930111
48-07	Son:	Tracy, Samuel II		1654		
47-	Wife 2nd:	Bourne, Martha			1678 ?	1689
47-	Wife 3rd:	Foote, Mary			1682 ?	

Continued, on the following Page.

LIEUTENANT THOMAS TRACY II was Born, Raised, Educated and Immigrated to the American Colonies, from Stanway Manor, Gloucestershire, England. He arrived at Salem, MA, in April, 1636 and was a Carpenter by Trade.

As the Eighteenth (18th) Child and Nineth (9th) Son of a very large Family, of Royal Descent, he had very few procpects, for an Inheritance, after his Parents Death, which proved true. He felt that he had a better chance for success in the American Colonies which also proved true.

In February of 1637 he had re-located to Wethersfield, CT. There, in 1641, he Married First, MARY , who's origins are unknown. She may have been the Widow of Edward Mason and is believed to have been Childless. They settled at Saybrook, CT, where all of their Children were Born.

As a result of his and others support of the Mohegan Indians against the Narragansett Indians, they were granted the opportunity to establish the Town of Norwich, CT, in 1659. The Tracy Family re-located to Norwich, CT, in 1660. His First Wife MARY ( ) TRACY Died there some time before his Second Marriage, prior to 1678 ?

As a Member of the CT Militia, in 1666, he was Commissioned an Ensign, in the First Train (Training) Band of Norwich, CT. In 1673, he was Commissioned a Lieutenant in the New London County, CT, Dragoons, raised to fight the Dutch and Indians.

In 1678 ?, he Married Second, the Widow Martha (Bourne) Bradford, at Norwich, CT, the Daughter of Thomas and Elizabeth ( ) Bourne, of Marshfield, MA. She was the Widow of John Bradford I, the Son of William IV and Dorothy (May) Bradford of Plymouth, MA. William Bradford IV was the Second Governor of Plymouth Colony and both he and his Wife were Mayflower Passengers, in 1620. The Widow Martha (Bourne) Bradford bore no Children, in either Marriage.

It is said that he Married Third the Widow Mary (Foote) Stoddard/Goodrich. It is Ssid that Martha (Bourne) Bradford/Tracy Died in 1689, Four Years after the Death of THOMAS TRACY II, her Second Husband. The Second and Third Marriage has no bearing on our Heritage, neither Woman was our Ancestor.

For the time in which he lived, LIEUTENANT THOMAS TRACY II was well Educated. This placed him advantageously, among the leading Men of the Colonies, imediatly, upon his arrival. He avoided publication of his Royal Descent.

He was a prosperous Gentleman of consequence, in the Community, a thorough Businessman and of the Highest Character. Throughout his long life, he was appointed to important Committee's. He held a full share of Public Offices, Legislative, Military and Magisterial. In 1678, he was appointed a Justice of the CT Court.

PEDIGREE OF: TRACY, THOMAS II * LIEUTENANT

ANCESTOR TREE: Generation 43 thru 47-18

GENERATION: 47-18

ISSUED: 20070106

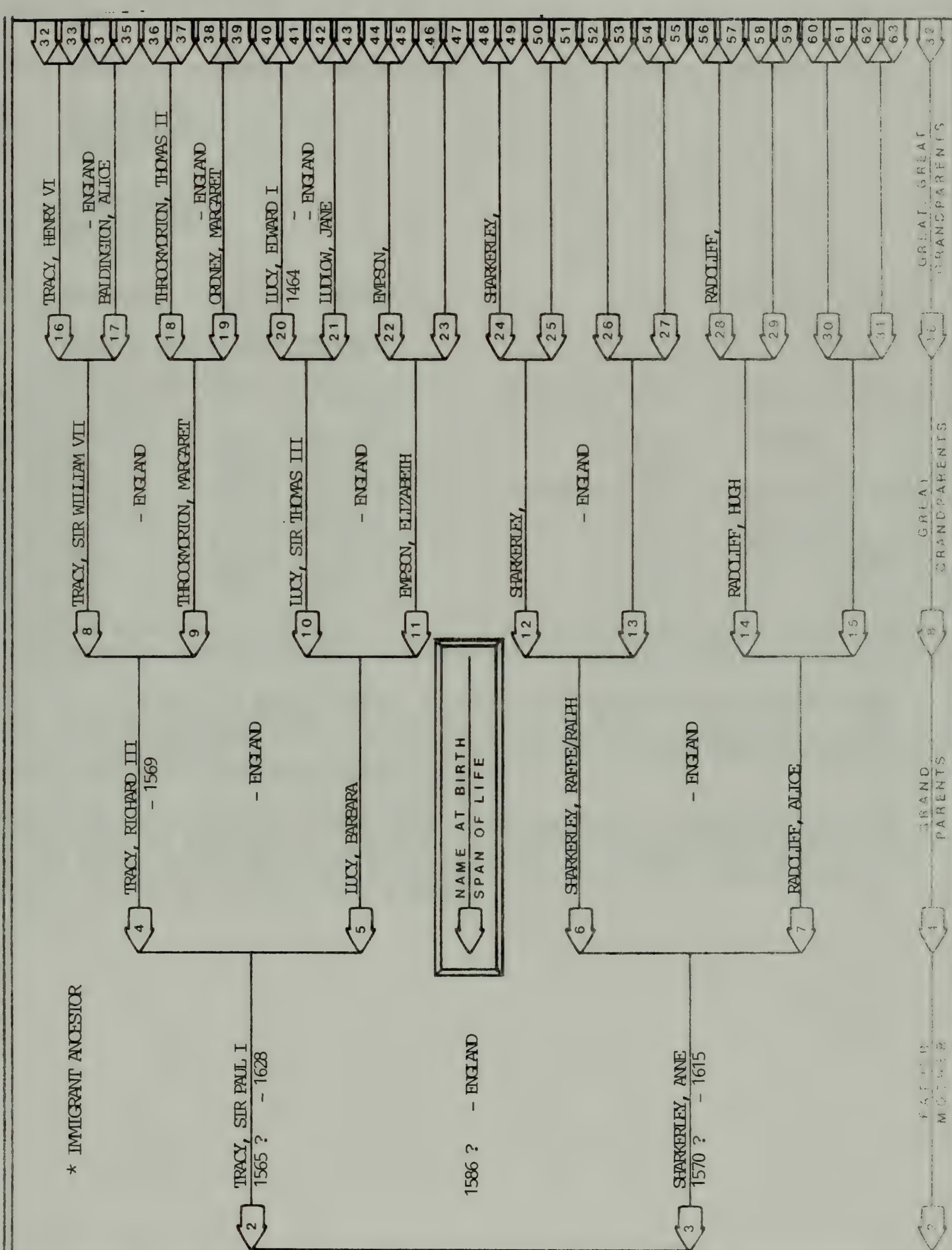

PEDIGREE OF: , MARY * GENERATION: 47-
BORN AT: Perhaps ENGLAND ISSUED: 20060210
DIED AT: NORWICH, CT
BURIED AT:

GEN.	STATUS	ANCESTORS/DESCENDANTS		BORN	MARRIED	DIED
45-	GRANDFATHER:					
45-	GRANDMOTHER:					
46-	FATHER:					
45-	GRANDFATHER:					
45-	GRANDMOTHER:					
46-	MOTHER:					
47-	SUBJECT:	, MARY *			Twice	1670 ?
47-	Husband 1st:	Mason, Edward *				1637 ?
47-	HUSBAND 2nd	TRACY, THOMAS II *	LIEUTENANT	1610	1641 ?	16851107
48-01	Son:	Tracy, John V		1642	16700610	
48-02	Son:	Tracy, Thomas III		1644		
48-03	SON:	TRACY, JONATHAN I	REVEREND	1646	16720711	17040225
48-04	Daughter:	Tracy, Mariam I		1648	1668 ?	
48-05	Son:	Tracy, Solomon I		1651	Twice	1728 ?
48-06	Son:	Tracy, Daniel I		1652	N/A	16930111
48-07	Son:	Tracy, Samuel II		1654		

The Origin and Siblings of MARY , if any, are unknown. There is no doubt that she was an Immigrant Ancestor to America, probably from England.

MARY , Married Edward Mason, at Wethersfield, CT, where he Died before 1640. It is believed that she bore him no Children. There is conflicting information, concerning MARY ( ) TRACY. It has been claimed that the Widow of Edward Mason never remarried, after his death

There is no question, that THOMAS TRACY II Married a woman named MARY, at Wethersfield, CT the question of who she was, is not confirmed. Whoever she was, She was the Mother of all of the TRACY Children. She may not have been previously Married and she may not have been a Widow.

PEDIGREE OF: TRACY, JONATHAN I REVEREND GENERATION: 48-03
BORN AT: Saybrook, CT ISSUED: 20041101
DIED AT: Norwich, CT
BURIED AT: Norwich, CT

GEN.	STATUS	ANCESTORS/DESCENDANTS		BORN	MARRIED	DIED
46-(	GRANDFATHER:	TRACY, SIR PAUL I	BARONET	1565 ?	Twice	1626
46-	GRANDMOTHER:	SHARKERLEY, ANNE	LADY	1570 ?	1586 ?	1615
47-18	FATHER:	TRACY, THOMAS II *	LIEUTENANT	1610	Thrice	16851107
46-	GRANDFATHER:					
46-	GRANDMOTHER:					
47-	MOTHER:	, MARY *			1641	1670 ?
48-01	Brother:	Tracy, John V		1642	16700610	17020816
48-02	Brother:	Tracy, Thomas III		1644		
48-03	SUBJECT:	TRACY, JONATHAN I	REVEREND	1646	16720711	17040225
48-04	Sister:	Tracy, Mariam I		1648	1668 ?	
48-05	Brother:	Tracy, Solomon I		1651	Twice	
48-06	Brother:	Tracy, Daniel I		1652	Twice	1728 ?
48-07	Brother:	Tracy, Samuel II		1654		16930111
48-03	WIFE 1st:	GRISWOLD, MARY		16560826	16720711	
49-01	Daughter:	Tracy, Hannah I		16770708		
49-02	SON:	TRACY, CHRISTOPHER I		16800501	17050520	17260209
49-03	Daughter:	Tracy, Mary I		16820907		
49-04	Daughter:	Tracy, Mariam II		16850423		
49-05	Son:	Tracy, David I		16870924		
49-06	Son:	Tracy, Francis I		16900401	17130106	17551128
49-07	Daughter:	Tracy, Sarah		16920802	N/A	16930906
49-08	Son:	Tracy, Samuel III		16970606		

JONATHAN TRACY I was Born, Raised and Educated at Saybrook, CT, he then re-located, with the TRACY Family, to Norwich, CT.

He Married MARY GRISWOLD, at Saybrook, CT, the Daughter of FRANCIS I and ( ) GRISWOLD, of Saybrook, CT. After his Marriage, the Newly Weds re-located to Norwich, CT, where they remained, for the Balance of their Lives.

JONATHAN TRACY I was addressed as REVEREND, perhaps he was a Minister of the Congregational Church.

PEDIGREE OF: GRISWOLD, MARY
BORN AT: Saybrook, CT
DIED AT: Norwich, CT
BURIED AT: Norwich, CT

GENERATION: 48-03
ISSUED: 20041110

GEN.	STATUS	ANCESTORS/DESCENDANTS		BORN	MARRIED	DIED
46-	GRANDFATHER:	GRISWOLD. EDWARD I *		1607 ?		1691 ?
46-	GRANDMOTHER:					
47-	FATHER:	GRISWOLD, FRANCIS II *		1632 ?		167110
46-	GRANDFATHER:					
46-	GRANDMOTHER:					
47-	MOTHER:					
48-01	Sister:	Griswold, Sarah		16530328		
48-02	Brother:	Griswold, Joseph II		16550604	N/A	1655 ?
48-03	SUBJECT:	GRISWOLD, MARY		16560826	16720711	
48-04	Sister:	Griswold, Hannah		16581211	16780307	
48-05	Sister:	Griswold, Deborah II		166105		
48-06	Sister:	Griswold, Lydia I		1663 ?	N/A	1664 ?
48-07	Brother:	Griswold, Samuel II		1665 ?		
48-08	Sister:	Griswold, Margaret		1668 ?		
48-09	Sister:	Griswold, Lydia II		167110	Twice	17520106
48-03	HUSBAND 1st:	TRACY, JONATHAN I	REVEREND	1644 ?	16720711	17040225
49-01	Daughter:	Tracy, Hannah I		16770708		
49-02	SON:	TRACY, CHRISTOPHER I		16800501	17050520	17260209
49-03	Daughter:	Tracy, Mary I		16820907		
49-04	Daughter:	Tracy, Mariam II		16850423		
49-06	Son:	Tracy, David I		16870924		
49-06	Son:	Tracy, Francis I		16900401	17130106	17551128
49-07	Daughter:	Tracy, Sarah		16920802	N/A	16930906
49-08	Son:	Tracy, Samuel III		16970606		

MARY GRISWOLD was Born, Raised, Educated and Married at Saybrook, CT.

She Married JONATHAN TRACY I, at Saybrook, CT, the Son of THOMAS II and MARY ( ) TRACY, of Norwich, CT. After her Marriage, the Newly Weds Settled at Norwich, CT, where they remained, for the Balance of their Lives.

GRISWOLD may be Spelled GRISWALD or GRISWOULD.

PEDIGREE OF: PARISH, LYDIA
BORN AT: Groton, MA
DIED AT: Norwich, CT
BURIED AT: Norwich, CT

GENERATION: 49-01
ISSUED: 20041101

GEN.	STATUS	ANCESTORS/DESCENDANTS	BORN	MARRIED	DIED
47-	GRANDFATHER:	PARISH,			
47-	GRANDMOTHER:				
48-	FATHER:	PARISH, JOHN I		Twice	1715
47-	GRANDFATHER:	WATTELL, JOHN I			
47-	GRANDMOTHER:				
48-	MOTHER:	WATTELL. MARY (2nd WIFE)		16851229	
49-01	SUBJECT:	PARISH, LYDIA	16870420	17050520	
49-02	Sister:	Parish, Elizabeth	16910319	17140106	
49-03	Sister:	Parish, Sarah	16920116	17091006	17280110
49-04	Brother:	Parish, William I	16940211		
49-05	Brother:	Parish, Isaac I	16970317	17210331	1765 ?
49-06	Sister:	Parish, Rachell	16990214	17191028	
49-07	Sister:	Parish, Mary	17041008	17251109	
49-08	Sister:	Parish, Abigail	17080325		
49-09	Sister:	Parish, Dorothy	17100607	17261109	17780712
49-10	Brother:	Parish, Ephriam			
49-02	HUSBAND 1st:	TRACY, CHRISTOPHER I	16800301	17050520	17260209
50-01	Daughter:	Tracy, Lydia	17060505	17320518	
50-02	Daughter:	Tracy, Mary II	17080114	N/A	17080625
50-03	Daughter:	Tracy, Hannah II	17090427	17270406	
50-04	Son:	Tracy, Christopher II	17110601	17340328	
50-05	Son:	Tracy, Jonathan II	17131216		
50-06	Daughter:	Tracy, Lucy II	17160209		
50-07	Daughter:	Tracy, Bethiah	17180719		
50-08	DAUGHTER:	TRACY, DOROTHY	17200111	17431207	
50-09	Daughter:	Tracy, Esther	17210115	17421028	
50-10	Daughter:	Tracy, Deborah	17220420		
50-11	Son:	Tracy, Solomon II	17240808		
50-12	Daughter:	Tracy, Jerusha	17250504		

LYDIA PARISH was Born at Groton, MA, Raised and Educated, at Ipswich, MA.

She Married CHRISTOPHER TRACY I, at Preston, CT, the Son of JONATHAN I and MARY (GRISWOLD) TRACY of Norwich, CT, the Newly Weds re-located to Norwich, CT where they spent the Balance of their Lives.

PEDIGREE OF: TRACY, CHRISTOPHER I
BORN AT: Norwich, CT
DIED AT: Norwich, CT
BURIED AT: Norwich, Ct

GENERATION: 49-02
ISSUED: 20041101

GEN.	STATUS	ANCESTORS/DESCENDANTS		BORN	MARRIED	DIED
47-18	GRANDFATHER:	TRACY, THOMAS II *	LIEUTENANT	1610	Twice	16851107
47-	GRANDMOTHER:	, MARY *			1641	1670 ?
48-03	FATHER:	TRACY, JONATHAN I	REVEREND	1644	16720711	17040225
47-	GRANDFATHER:	GRISWOLD, FRANCIS II *		1631 ?		167110
47-	GRANDMOTHER:					
48-03	MOTHER:	GRISWOLD, MARY		16560826	16720711	17110424
49-01	Sister:	Tracy, Hannah I		16770708		
49-02	SUBJECT:	TRACY, CHRISTOPHER I		16800501	17050520	17260209
49-03	Sister:	Tracy, Mary I		16820907		
49-04	Sister:	Tracy, Mariam II		16850423		
49-05	Brother:	Tracy, David I		16870924		
49-06	Brother:	Tracy, Francis I		16900401	17130106	17551128
49-07	Sister:	Tracy, Sarah		16920802	N/A	16930906
49-08	Brother:	Tracy, Samuel III		16970606		
49-01	WIFE 1st:	PARISH, LYDIA		16870420	17050520	
50-01	Daughter:	Tracy, Lydia		17060505	17320518	
50-02	Daughter:	Tracy, Mary II		17080114	N/A	17080625
50-03	Daughter:	Tracy, Hannah II		17090427	17270406	
50-04	Son:	Tracy, Christopher II		17110601	17340328	
50-05	Son:	Tracy, Jonathan II		17131216		
50-06	Daughter:	Tracy, Lucy II		17160209		
50-07	Daughter:	Tracy, Bethiah		17180719		
50-08	DAUGHTER:	TRACY, DOROTHY		17200111	17431207	
50-09	Daughter:	Tracy, Esther		17210119	17421028	
50-10	Daughter:	Tracy, Deborah		17220420		
50-11	Son:	Tracy, Solomon II		17240808		
50-12	Daughter:	Tracy, Jerusha		17250504		

CHRISTOPHER TRACY I was Born, Raised and Educated at Norwich, CT.

He Married LYDIA PARISH, at Preston, CT, the Daughter of JOHN I and MARY (WATTELL) PARISH, of Preston CT. After their Marriage, the Newly Weds re-located to Norwich, CT, where they spent the Balance of their Lives.

PEDIGREE OF: LEE, ISRAEL I
BORN AT: Lebanon, CT
DIED AT: Lebanon, CT
BURIED AT: Goshen Cemetary, Lebanon, CT

GENERATION: 50-01
ISSUED: 20041110

GEN.	STATUS	ANCESTORS/DESCENDANTS	BORN	MARRIED	DIED
48-03	GRANDFATHER:	LEE, STEPHEN I	16610305	16911223	17250905
48-01	GRANDMOTHER:	WOODWARD, ELIZABETH	16720317	16911223	17280118
49-02	FATHER:	LEE, SAMUEL I	MD 16950509	17191126	17821210
48-	GRANDFATHER:	BALDWIN, JOHN II	16541205	1680	1705
48-	GRANDMOTHER:	ABELL, EXPERIENCE		1680	
49-	MOTHER:	BALDWIN, MEHITABEL	1695	17191126	17840707
50-01	SUBJECT:	LEE, ISRAEL I	17201021	17431207	
50-02	Brother:	Lee, Samuel II	17280911	17511225	
50-08	WIFE 1st:	TRACY, DOROTHY	17200111	17431207	
51-01	Son:	Lee, Israel II	17441225	17681214	
51-02	Son:	Lee, Solomon I	17470328	17561216	18110930
51-03	Daughter:	Lee, Jerusha	17490623		
51-04	Daughter:	Lee, Mehitabel	17511110		
51-05	SON:	LEE, DAN I	17520713	1781 ?	1802 ?
51-06	Daughter:	Lee, Dorothy	17560403		17921025
51-07	Daughter:	Lee, Sara	17610608	17801027	

ISRAEL LEE I was Born, Raised, Educated, Married and Died at Lebanon, CT.

He Married DOROTHY TRACY, at Lebanon, CT, the Daughter of CHRISTOPHER I and LYDIA (PARISH) TRACY of Preston, CT. The Newly Weds remained at Lebanon, CT, for the Balance of their Lives.

COMMENTARY:

The information for JOHN II and EXPERIENCE (ABELL) BALDWIN has been provided by Savage. It is Inconcieveable that JOHN BALDWIN II Married EXPERIENCE (ABELL) BALDWIN, when she was possibly Five Years Old. They had a Son John III and Three Daughters. It is assumed that One of those Daughters was MEHITABEL.

The only explanation that I can think of is, JOHN II had been previously Married, in 1680. He then Married EXPERIENCE ABELL, perhaps in 1692 ?, when she was perhaps Eighteen Years Old and he was Thirty Eight Years Old, prior to the Birth of Their Four Children. Ofcoarse, if this is a fact, he may have had Children, in his First Marriage.

PEDIGREE OF: TRACY, DOROTHY
BORN AT: Preston, CT
DIED AT: Lebanon, CT
BURIED AT: Goshen Cemetary, Lebanon, CT

GENERATION: 50-08
ISSUED: 20041101

GEN.	STATUS	ANCESTORS/DESCENDANTS		BORN	MARRIED	DIED
48-03	GRANDFATHER:	TRACY, JONATHAN I	REVEREND	1646	16720711	17040225
48-03	GRANDMOTHER:	GRISWOLD, MARY		16560826	16720711	17110424
49-02	FATHER:	TRACY, CHRISTOPHER I		16800501	17050520	17260209
48-	GRANDFATHER:	PARISH, JOHN I			Twice	1715 ?
48-	GRANDMOTHER:	WATTELL, MARY			16851229	
49-01	MOTHER:	PARISH, LYDIA		16870420	17050520	
50-01	Sister:	Tracy, Lydia		17060505	17320518	
50-02	Sister:	Tracy, Mary II		17080114	N/A	17080625
50-03	Sister:	Tracy, Hannah II		17090427	17270406	
50-04	Brother:	Tracy, Christopher II		17110601	17340328	
50-05	Brother:	Tracy, Jonathan II		17131216		
50-06	Sister:	Tracy, Lucy II		17160209		
50-07	Sister:	Tracy, Bethiah		17180719		
50-08	SUBJECT:	TRACY, DOROTHY		17200111	17431207	
50-09	Sister:	Tracy, Esther		17210119	17421028	
50-10	Sister:	Tracy, Deborah		17220420		
50-11	Brother:	Tracy, Solomon II		17240808		
50-12	Sister:	Tracy, Jerusha		17250504		
50-01	HUSBAND 1st:	LEE, ISRAEL I		17201021	17431207	
51-01	Son:	Lee, Israel II		17441225	17681214	
51-02	Son:	Lee, Solomon I		17470328	17551216	18110930
51-03	Daughter:	Lee, Jerusha		17490623		
51-04	Daughter:	Lee, Mehitabel		17511110		
51-05	SON:	LEE, DAN I		17520713	1781 ?	1802 ?
51-06	Daughter:	Lee, Dorothy		17560403		17921025
51-07	Daughter:	Lee, Sara		17610608	17801027	

DOROTHY TRACY was Born, Raised and Educated at Preston, CT.

She Married ISRAEL LEE I, at Lebanon, CT, the Son of SAMUEL I and MEHITABEL (BALDWIN) LEE of Lebanon, CT and the Newly Weds remained there, for the Balance of their Lives.

PERSONAL PEDIGREE

ANCESTOR TREE

* IMMIGRANT ANCESTOR

2 TRACY, CHRISTOPHER I
16800501 - 17260209

17050520 - LEBONAN, CT

4 TRACY, JONATHAN I
1646 - 17040225

16720715 - SAYBROOK, CT

5 GRISWALD, MARY
16560826 - 17110424

NAME AT BIRTH
SPAN OF LIFE

3 PARISH, LYDIA
16870420 -

6 PARISH, JOHN I
- 1715 ?

16851228 - GROTON, MA

7 WATTELL, MARY

8 TRACY, THOMAS I *
1610 - 16851107

1641 ? - WETHERSFIELD, CT

9 , MARY *
- 1670 ?

10 GRISWALD, FRANCIS II *
1631 ? - 167110

11

12 PARISH,

13

14 WATTELL, JOHN I

15

16 TRACY, SIR PAUL I
1565 ? - 1628
1586 ? - ENGLAND

17 SHARKERLEY, ANNE
1570 ? - 1615

18

19

20 GRISWALD, EDWARD I *
1607 ? - 1691 ?

21

22

23

24 PARISH,

25

26

27

28 WATTELL,

29

30

31

32 33 3 35 36 37 38 39 40 41 42 43 44 45 46 47 48 49 50 51 52 53 54 55 56 57 58 59 60 61 62 63

2 FATHER MOTHER | 4 GRAND PARENTS | 8 GREAT GRANDPARENTS | 16 GREAT, GREAT GRANDPARENTS | 32

PEDIGREE OF: TRACY, DOROTHY
ANCESTOR TREE: Generation 46 thru 50-03

GENERATION: 50-03
ISSUED: 20070106

PEDIGREE OF: LEE, DAN I
BORNAT: Lebanon, CT
DIED AT: Lebanon, CT
BURIED AT: Goshen Cemetary, Lebanon, CT

GENERATION: 51-05
ISSUED: 20041110

GEN.	STATUS	ANCESTORS/DESCENDANTS	BORN	MARRIED	DIED
49-02	GRANDFATHER:	LEE, SAMUEL I	MD 16950509	17191126	17821210
49-	GRANDMOTHER:	BALDWIN, MEHITABEL	1695 ?	17191126	17840707
50-01	FATHER:	LEE, ISRAEL I	17201021	17431207	
49-02	GRANDFATHER:	TRACY, CHRISTOPHER I	16800501	17050520	17260209
49-01	GRANDMOTHER:	PARISH, LYDIA	16870420	17050520	
50-08	MOTHER:	TRACY, DOROTHY	17200111	17431207	
51-01	Brother:	Lee, Israel II	17441225	17681214	
51-02	Brother:	Lee, Solomon I	17470328	17551216	18110930
51-03	Sister:	Lee, Jerusha	17490623		
51-04	Sister:	Lee, Mehitabel	17511110		
51-05	SUBJECT:	LEE, DAN I	17520713	1781 ?	1802 ?
51-06	Sister:	Lee, Dorothy	17560403		17921025
51-07	Sister:	Lee, Sara	17610608	17801027	
51-	WIFE 1st:	, DESIRE		Twice	
52-01	SON:	LEE, NEMEMIAH I	1782 ?	Twice	
52-02	Son:	Lee, William I		18241006	
52-03	Daughter:	Lee, Dolly			
52-04	Daughter:	Lee, Almira		18160106	
52-05	Son:	Lee, Dan II			
52-06	Son:	Lee, Tracy I			
52-07	Son:	Lee, Christopher Tracy I	1802 ?	18241031	

DAN LEE I was Born, Raised, Educated, Married and Died, at Lebanon, CT.

He Married DESIRE , at Lebanon, CT, who's Origins are unknown. He remained at Lebanon, CT for the Balance of his Life.

The Birth of his Last Child, Christopher Tracy Lee I, may have been Born after the Death of DAN LEE I.

PEDIGREE OF: , DESIRE GENERATION: 51-
BORN AT: ISSUED: 20070106
DIED AT:
BURIED AT:

GEN.	STATUS	ANCESTORS/DESCENDANTS	BORN	MARRIED	DIED
49-	GRANDFATHER:				
49-	GRANDMOTHER:				
50-	FATHER:				
49-	GRANDFATHER:				
49-	GRANDMOTHER:				
50-	MOTHER:				
51-	SUBJECT:	, DESIRE		Twice	
51-05	HUSBAND 1st:	LEE, DAN I	17520713	1780 ?	1802 ?
52-01	SON:	LEE, NEHEMIAH I	1782 ?	Twice	1863 ?
52-02	Son:	Lee, William I		18241006	
52-03	Daughter:	Lee, Dolly			
52-04	Daughter:	Lee, Almira		18160106	
52-05	Son:	Lee, Dan II			
52-07	Son:	Lee, Christopher Tracy I	1802 ?	18241031	
51-	Husband 2nd:	Smith, Samuel		1802 ?	

The ancestors, Siblings and Origin of DESIRE ( ) LEE, are unknown.

She Married 1st, at Lebanon, CT, DAN LEE I, the Son of ISRAEL I and DOROTHY (TRACY) LEE, of Lebanon, CT and remained there, where all of her LEE Children were Born.

She Married 2nd, at Lebanon, CT, Samuel Smith, of West Springfield, MA and relacated there with her youngest Son, Christopher Tracy Lee I. The fate of her other LEE Children, other than NEHEMIAH LEE I, is unknown.

HISTORICAL NOTE of INTEREST:

In 1620, Desire Minteer was a Mayflower Passenger, By 1621, half of the Pilgrims had Died of Disease. She was one of the survivors, who selflessly cared for those who Died. As a result, many of the surviving Pilgrims Named their future Daughters DESIRE, in her Honor. The name DESIRE has been passed down to succeeding Generations. In 1623, Desire Minteer, returned to England, un-married and Died, Childless.

I have found that the Name DESIRE has nor been used by our PURITAN Ancestors. If a SURNAME for DESIRE ( ) LEE can be found ? I believe that it is possible to trace her ANCESTORS, back to , atleast One Mayflower Passenger, in 1620.

PEDIGREE OF: LEE, NEHEMIAH I
BORN AT: Lebanon, CT
DIED AT: Norwich, CT
BURIED AT: Yantic Cemetary, Norwich, CT

GENERATION: 52-01
ISSUED: 20041101

GEN.	STATUS	ANCESTORS/DESCENDANTS	BORN	MARRIED	DIED
50-01	GRANDFATHER:	LEE, ISRAEL I	17201021	17431207	
50-08	GRANDMOTHER:	TRACY, DOROTHY	17200111	17431207	
51-05	FATHER:	LEE, DAN I	17520713	1781 ?	1802 ?
50-	GRANDFATHER:				
50-	GRANDMOTHER:				
51-	MOTHER:	, DESIRE		Twice	
52-01	SUBJECT:	LEE, NEHEMIAH I	1782 ?	Twice	1863 ?
52-02	Brother:	Lee, William I		18241006	
52-03	Sister:	Lee, Dolly			
52-04	Sister:	Lee, Almira		18160106	
52-05	Brother:	Lee, Dan II			
52-06	Brother:	Lee, Tracy I			
52-07	Brother:	Lee, Christopher Tracy I	1802 ?	18241031	
52-	WIFE 1st:	, BETSEY M		1820?	1837 ?
53-01	Son:	Lee, Henry P I	18210725	Twice	18940727
53-02	SON:	LEE, ORLANDO BRIDGES I	1823 ?	Twice	19050312
53-03	Daughter:	Lee, Caroline B	1825 ?	18501014	19050121
53-04	Daughter:	Lee, Elizabeth	182701		
53-05	Daughter:	Lee, Jane			
53-05	Daughter:	Lee, Clarissa	183701		18781024
53-07	Son:	Lee, Austin I			
52-	WIFE 2nd:	Arnold, Polly	1783 ?	18371220	

NEHEMIAH LEE I was Born, Raised, Educated and First Married, at Lebanon, CT.

He Married 1st, at Lebanon, CT, BETSEY M , who's Origins are unknown. They Re-located to Colchester, CT, where all the Children were Born and she Died.

He Married 2nd, at East Hampton, CT, Polly Arnold, the Daughter of Jabez and Martha (Freeman) Arnold, of East Hampton, CT and returned to Colchester, CT. By 1847, they had re-located to Norwich, CT, he was by now a Teamster. They Remained at Norwich, CT, for the Balance of their Lives.

The information provided for MEHEMIAH and BETSEY, is Questionable. It may be that they had Younger Children, than shown, perhaps at other than Colchester, CT.

PEDIGREE OF: , BETSEY M
BORN AT:
DIED AT: Colchester, CT
BURIED AT:

GENERATION: 52-
ISSUED: 20050222

GEN.	STATUS	ANCESTORS/DESCENDANTS	BORN	MARRIED	DIED
50-	GRANDFATHER:				
50-	GRANDMOTHER:				
51-	FATHER:				
50-	GRANDFATHER:				
50-	GRANDMOTHER:				
51-	MOTHER:				
52-	SUBJECT:	, BETSEY M		1820 ?	1837 ?
52-01	HUSBAND 1st:	LEE, NEHEMIAH I	1782 ?	Twice	1863 ?
53-01	Son:	Lee, Henry P I	18210725	Twice	18940727
53-02	SON:	LEE, ORLANDO BRIDGES I	1823 ?	Twice	19050312
53-03	Daughter:	Lee, Caroline B	1825 ?	18501014	19050121
53-04	Daughter:	Lee, Elizabeth	182701		
53-05	Daughter:	Lee, Jane			
53-05	Daughter:	Lee, Clarissa	183701		18781024
53-06	Son:	Lee, Austin I			

The Origins of BETSEY M ( ) LEE are unknown.

She Married 1st, at Lebanon, CT, NEHENIAH LEE I, the Son of DAN I and DESIRE ( ) LEE, of Lebanon, CT. After her Marriage, they re-located to Colchester, CT, where she spent the Balance of her Life. She may have Died in Child Birth.

The information provided for NEHEMIAH and BETSEY, is questionable. It may be that they had Younger Children, than shown, perhaps at other than Colchester, CT.

The Middle Name BRIDGES, appears to have been a Surname, of perhaps one of BETSEY'S Family Relatives ?

PEDIGREE OF: LEE, ORLANDO BRIDGES I
BORN AT: Colchester, CT
DIED AT: Westfield, MA
BURIED AT: Yantic Cemetary, Norwich, CT

GENERATION: 53-02
ISSUED: 20041101

GEN.	STATUS	ANCESTORS/DESCENDANTS	BORN	MARRIED	DIED
51-05	GRANDFATHER:	LEE, DAN I	17520713		1802 ?
51-	GRANDMOTHER:	, DESIRE		Twice	
52-01	FATHER:	LEE, NEHEMIAH I	1782 ?	Twice	1863 ?
51-	GRANDFATHER:				
51-	GRANDMOTHER:				
52-	MOTHER:	, BETSEY M		1820 ?	1837 ?
53-01	Brother:	Lee, Henry P I	18210725	Twice	18940727
53-02	SUBJECT:	LEE, ORLANDO BRIDGES I	1823 ?	Twice	19050312
53-03	Sister:	Lee, Caroline B	1825 ?	18501014	19050121
53-04	Sister:	Lee, Elizabeth	182701		
53-05	Sister:	Lee, Jane			
53-06	Sister:	Lee, Clarissa	183701		18781024
53-07	Brother:	Lee, Austin I			
53-	Wife 1st:	Smith, Eunice T	1821 ?	18440928	18560429
54-01	Son:	Lee, George O I	1845 ?		19050604
53-	WIFE 2nd:	GASKILL, MARY ELIZABETH	18280127	18570527	18940427
54-02	Daughter:	Lee, Minnie Eliza	18580513	18860222	19430128
54-03	Daughter:	Lee, Harriet Augusta	18600306	18840707	19540120
54-04	DAUGHTER:	LEE, CLARA/CARRIE	18621129	18821109	19351230
54-05	Son:	Lee, Frank Henry I	18690324		19330207

ORLANDO BRIDGES LEE I was Born, Raised and Educated, at Colchester, CT but spent most of his Life, at Norwich, CT, until his Retirement and Death, at the Home of his Son, Frank Henry Lee I, at Westfield, MA.

He was 1st Married, at Norwich, CT, Eunice Smith, who's Origins are unknown.

He Married 2nd, at Norwich, CT, MARY ELIZABETH GASKILL, the Daughter of BENJAMIN and PHEBE (RAYMORE) GASKILL, of Griswold, CT and Settled at Norwich, CT.

In his Working Career he was Employed in various Occupations, Working as an Undertaker, a Fire Arms Factory Worker, a Sales Agent for many Patented Articles and finally, the Owner/Operator of a Bake Shop, with his Partner John Marden, until his Retirement.

PEDIGREE OF: GASKILL, MARY ELIZABETH — GENERATION: 53-
BORN AT: Griswold, CT — ISSUED: 20041101
DIED AT: Norwich, CT
BURIED AT: Yantic Cemetary, Norwich, CT,

GEN.	STATUS	ANCESTORS/DESCENDANTS	BORN	MARRIED	DIED
51-	GRANDFATHER:	GASKILL,			
51-	GRANDMOTHER:				
52-	FATHER:	GASKILL, BENJAMIN			
51-	GRANDFATHER:	RAYMORE,			
51-	GRANDMOTHER:				
52-	MOTHER:	RAYMORE, PHEBE			
53-	SUBJECT:	GASKILL, MARY ELIZABETH	18280127	18570527	18940427
53-02	HUSBAND 1st:	LEE, ORLANDO BRIDGES I	1823 ?	Twice	19050321
54-01	Step Son:	Lee, George O I	1845 ?		19050604
54-02	Daughter:	Lee, Minnie Eliza	18580513	18860222	19430128
54-03	Daughter:	Lee, Harriet Augusta	18600306	18840707	19540120
54-04	DAUGHTER:	LEE, CLARA/CARRIE	16621129	18821109	19351230
54-05	Son:	Lee, Frank Henry I	18690324		19330207

The Siblings of MARY ELIZABETH GASKILL, are unknown, nor is their Order of Birth.

She was Born, Raised and Educated, at Griswold, CT.

She Married ORLANDO BRIDGES LEE I, at Norwich, CT, the Son of NEHEMIAH I and BETSEY M ( ) LEE, of Norwich, CT, as his 2nd WIFE and remained at Norwich, CT, for the Balance of her Life.

PEDIGREE OF: SMITH, REVILLO NEHEMIAH I
BORN AT: NORWICH, CT
DIED AT: 47 Fairmont Street, Dorchester, MA
BURIED AT: Yantic Cemetary, Norwich, CT

GENERATION: 54-01
ISSUED: 20041101

GEN.	STATUS	ANCESTORS/DESCENDANTS	BORN	MARRIED	DIED
52-02	GRANDFATHER:	SMITH, ASA II	17811128	18021124	18580511
52-	GRANDMOTHER:	BECKWITH, MARY BRAINARD	17830303	18021124	1842 ?
53-10	FATHER:	SMITH, NEHEMIAH I	18190713	18501125	18990819
52-	GRANDFATHER:	DILLABY, CHARLES I			
52-	GRANDMOTHER:	DERBY, HARRIET			
53-	MOTHER:	DILLABY, MARIA	18310327	18501125	18850502
54-01	SUBJECT:	SMITH, REVILLO NEHEMIAH I	18570723	18821109	19251125
54-02	Brother:	Smith, William Asa I	18600106	18820126	19440312
54-04	WIFE 1st:	LEE, CLARA/CARRIE	18621129	18821109	19351230
55-01	DAUGHTER:	SMITH, FLORENCE DILLABY	18830823	19040615	19281110
55-02	Son:	Smith, Watrous Gaskill I	18860804	N/A	18890709
55-03	Son:	Smith, Morton Lee I	18910123	Twice	
55-04	Daughter:	Smith, Gertrude Reynolds	18941210		

REVILLO NEHEMIAH SMITH I was Born, Raised, Educated and Married at Norwich, CT He Established his Family Home at 47 Fairmont Street, Dorchester, MA, at which he Died.

He Married CLARA/CARRIE LEE, at Norwich, CT, the Daughter of ORLANDO BRIDGES I and MARY ELIZABETH (GASKILL) LEE of Norwich, CT.

He was a Frieght Agent for the Norwich/Worcester Railroad. After his Marriage, he became a Foriegn Frieght Agent, for the Railroad when he was transferred to the Boston, MA Office. All of his Children were Born, Raised, Educated and Married, from this Home, where he and his Wife remained for the Balance of their Lives.

PEDIGREE OF: LEE, CLARA/CARRIE — GENERATION: 54-04
BORN AT: Norwich, CT — ISSUED: 20041101
DIED AT: Quincy City Hospital, Quincy, MA
BURIED AT: Yantic Cemetary, Norwich, CT

GEN.	STATUS	ANCESTORS/DESCENDANTS	BORN	MARRIED	DIED
52-01	GRANDFATHER:	LEE, NEHEMIAH I	1782 ?	Twice	1863 ?
52-	GRANDMOTHER:	, BETSEY M		1820 ?	1837 ?
53-02	FATHER:	LEE, ORLANDO BRIDGES I	1823 ?	Twice	19050121
52-	GRANDFATHER:	GASKILL, BENJAMIN I			
52-	GRANDMOTHER:	RAYMORE, PHEBE			
53-	MOTHER:	GASKILL, MARY ELIZABETH	18280127	18570527	18940427
54-01	½ Brother:	Lee, George O I	1845 ?		19050604
54-02	Sister:	Lee, Minnie Eliza	18580513	18860222	19430128
54-03	Sister:	Lee, Harriet Augusta	18600306	18840707	19540120
54-04	SUBJECT:	LEE, CLARA/CARRIE	18621129	18821109	19351230
54-05	Brother:	Lee, Frank Henry I	18690324		19330207
54-02	HUSBAND 1st:	SMITH, REVILLO NEHEMIAH I	18570723	18621109	19251125
55-01	DAUGHTER:	SMITH, FLORENCE DILLABY	18830823	19040615	19281110
55-02	Son:	Smith, Watrous Gaskill I	18860804	N/A	18890709
55-03	Son:	Smith, Morton Lee I	18910123	Twice	
55-04	Daughter:	Smith, Gertrude Reynolds	18941210		

CLARA/CARRIE LEE was Born, Raised, Educated and Married, at Norwich, CT. She Settled and Died at 47 Fairmont Street, Dorchester, MA.

She Married REVILLO NEHEMIAH SMITH I, at Norwich, CT, the Son of NEHEMIAH I and MARIA (DILLABY) SMITH, of Norwich, CT.

After her Marriage, her Husband was re-assigned to the Boston, MA Office of the Norwich/Worcestor Railroad, as a Foriegn Frieght Agent. They established a Family Home at 47 Fairmont Street, Dorchester, MA, where they remained, for the Balance of their Lives.

Upon the Suicide of her Eldest Daughter, FLORENCE DILLABY (SMITH) TWEED, she re-wrote her Will, to Dis-Inherit the entire Tweed Family. Suicide was an un-pardonable Social Blunder, in those days.

In 1935, I was almost Seven Years Old. As a result of the previous paragraph, I cannot recall ever meeting CLARA/CARRIE (LEE) SMITH, my Great Grandmother. I wish I had. May God rest her soul, The Author.

PEDIGREE OF: LEE, CLARA/CARRIE
ANCESTOR TREE: Generation 50 thru 54-04

GENERATION: 54-04
ISSUED: 20070106

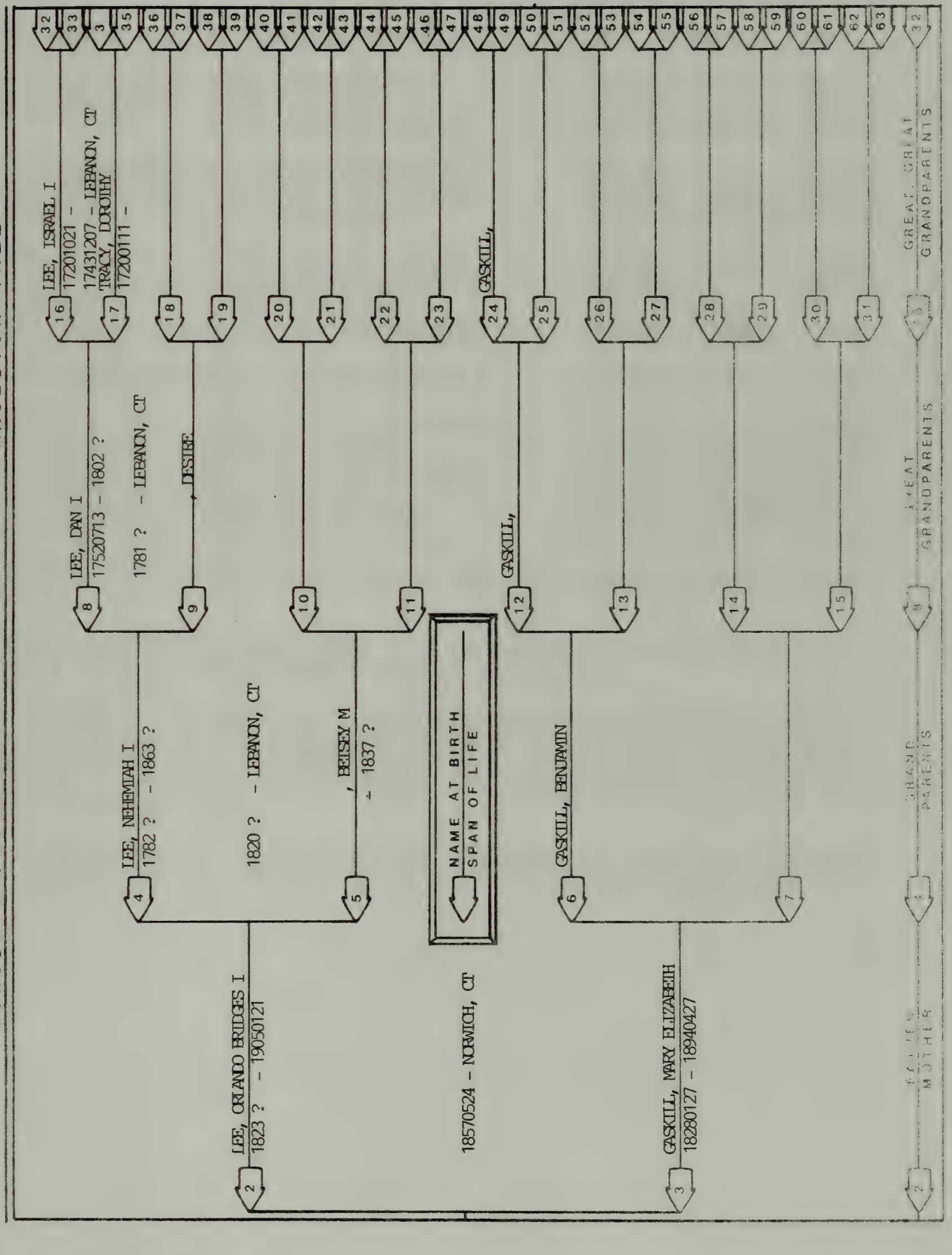

PEDIGREE OF: SMITH, FLORENCE DILLABY GENERATION: 55-01
BORN AT: 47 Fairmont Street, Dorchester, MA ISSUED: 20041001
DIED AT: Boston State Hospital, Mattapan, MA
BURIED AT: Cedar Grove Cemetary, Dorchester, MA, Sect, 18, Range D, Lot 241.

GEN.	STATUS	ANCESTORS/DESCENDANTS	BORN	MARRIED	DIED
53-10	GRANDFATHER:	SMITH, NEHEMIAH I	18190713	18501125	18990819
53-	GRANDMOTHER:	DILLABY, MARIA	18310327	18501125	18850502
54-01	FATHER:	SMITH, REVILLO NEHEMIAH I	18570723	18821109	19251125
53-02	GRANDFATHER:	LEE, ORLANDO BRIDGES I	1823 ?	Twice	19050312
53-02	GRANDMOTHER:	GASKILL, MARY ELIZABETH	18280127	18570527	18940427
54-04	MOTHER:	LEE, CLARA/CARRIE	18621129	18821109	19351230
55-01	SUBJECT:	SMITH, FLORENCE DILLABY	18830823	19040615	19281110
55-02	Brother:	Smith, Watrous Gaskill I	18860804	N/A	18890709
55-03	Brother:	Smith, Mortom Lee I	18910123	Twive	
55-04	Sister:	Smith, Gertrude Reynolds	18941210	19280904	
55-04	HUSBAND 1st:	TWEED, WILLIAM HARRISON I	18800302	19040615	19590929
56-01	Son:	Tweed, Revillo Harrison I	19041218	19331205	19940125
56-02	Daughter:	Tweed, Ella Smith	19060903	19280616	19970709
56-03	Son:	Tweed, Carleton Dillaby I	19080623	19360530	19941101
56-04	DAUGHTER:	TWEED, ALMA GIBSON	19110118	19280804	19940718
56-05	Daughter:	Tweed, Ruth Caroline	19171209	19330520	19990618
56-06	Daughter:	Tweed, Florence Arlene	19190119	N/A	19200809

FLORENCE DILLABY SMITH was Born, Raised, Educated, Married and Died at Boston, MA.

She Married WILLIAM HARRISON TWEED I, at Dorchester, MA, the Son of WILLIAM HENRY I and ELLA SOPHIA (SIMMONS) TWEED of Boston, MA.

In the late 1920's, she suffered from Depression and Melancholia and was unstable. She went to live with the Brady Family, at 101 Bowdoin Avenue, Dorchester, MA, until she was Committed to the Boston State Hospital, Mattapan, MA. There she committed Suicide, by Hanging, purportedly with the use of her hair, over the back of a door.

As the result of this un-pardonable Social Blunder, for those days, the entire Tweed Family was Dis-inherited, in the Will of her Mother, CLARA/CARRIE (LEE) SMITH.

PEDIGREE OF: TWEED, WILLIAM HARRISON I — GENERATION: 55-04
BORN AT: Boston, MA — ISSUED: 20041001
DIED AT: The Mulberry Nursing Home, Randolph, MA
BURIED AT: Cedar Grove Cemetary, Dorchester, MA, Sect. 18, Range D, lot 241.

GEN.	STATUS	ANCESTORS/DESCENDANTS		BORN	MARRIED	DIED
53-06	GRANDFATHER:	TWEED, TIMOTHY GIBSON I		18080121	18391031	18631126
53-06	GRANDMOTHER:	TRUE, MARY CASS		18170118	18391031	18590523
54-01	FATHER:	TWEED, WILLIAM HENRY I	USA	18400817	18690929	19131213
53-01	GRANDFATHER:	SIMMONS, WILLIAM DAVIS I		18110406	18330208	185403 ?
53-02	GRANDMOTHER:	HOLMES, HARRIET		18150111	18330208	18561226
54-05	MOTHER:	SIMMONS, ELLA SOPHIA		18481002	18690929	19341216
55-01	Sister:	Tweed, Mary Ella		18731213	Never	1951 ?
55-02	Sister:	Tweed, Harriet Louisa		18761005	N/A	18811007
55-03	Sister:	Tweed, Bessie Simmons		18781202	Never	1960 ?
55-04	SUBJECT:	TWEED, WILLIAM HARRISON I		18800303	19040615	19590929
55-05	Brother:	Tweed, Charles Russell I		18830308	N/A	18840514
55-06	Sister:	Tweed, Helen Cheney		18841028		19780926
55-07	Brother:	Tweed, Russell I		18870421		19590622
55-01	WIFE 1st:	SMITH, FLORENCE DILLABY		18830823	19040615	19281110
56-01	Son:	Tweed, Revillo Harrison I		19041218	19331205	19940125
56-02	Daughter:	Tweed, Ella Smith		19060903	19280616	19970709
56-03	Son:	Tweed, Carleton Dillaby I		19080623	19360530	19941101
56-04	DAUGHTER:	TWEED, ALMA GIBSON		19110118	19280804	19940718
56-05	Daughter:	Tweed, Ruth Caroline		19151209	19330520	19990618
56-06	Daughter:	Tweed, Florence Arlene		19190119	N/A	19200809

WILLIAM HARRISON TWEED I was Born, Raised, Educated and Married at Boston, MA.

He Married FLORENCE DILLABY SMITH at Dorchester, MA, the Daughter of REVILLO NEHEMIAH I and CLARA/CARRIE (LEE) SMITH of 47 Fairmont Street, Dorchester, MA. After this Marriage, they established a Family Home at 21 School Street, Dorchester, MA, where all the Children were Born.

He was Employed as either a Carpenter or an Electrician.

After the Death of his Wife, CLARA/CARRIE (LEE) SMITH, his Wifes Widowed Mother Dis-inherited the entire TWEED Family, in her Will. At that time, Suicide was an unpardonable Social Blunder.

After the Death of his Wife, he relocated to the TWEED Family Home at 481 West Street, Randolph, MA. The Home of his Widowed Mother, ELLA SOPHIA (SIMMONS) TWEED and his un-Married Sisters, where he remained for the Balance of his Life.

ALL DIRECT, BY BLOOD, DESCENDANTS of WILLIAM HARRISON TWEED I, are DIRECT, BY BLOOD, DESCENDANTS of, at least, Nineteen MAYFLOWER PASSENGERS, in 1620.

PERSONAL PEDIGREE

ANCESTOR TREE

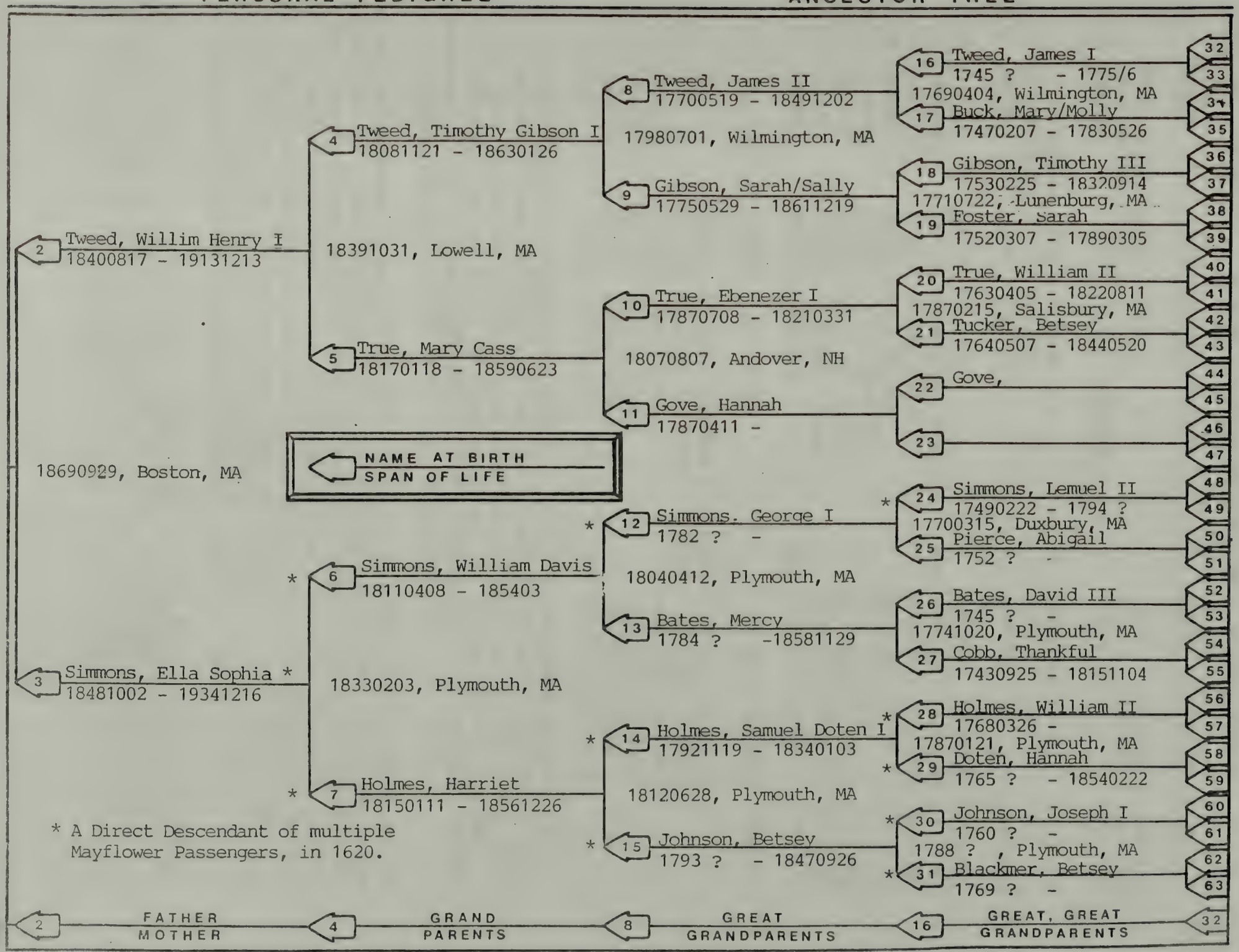

PEDIGREE OF: TWEED, WILLIAM HARRISON I
ANCESTOR TREE: Generation 51 Thru 55

GENERATION: 55-04
ISSUED: 20061231

PEDIGREE OF: BRADY, JOSEPH AUGUSTUS II USA GENERATION: 56-02
BORN AT: Washington Street, Dorchester, MA ISSUED: 20041001
DIED AT: Brockton City Hospital, Brockton, MA
BURIED AT: Blue Hills Cemetary, Braintree, MA, Sect. 22, LOT 782.

GEN.	STATUS	ANCESTORS/DESCENDANTS		BORN	MARRIED	DIED
54-	GRANDFATHER:	BRADY, PATRICK I *		1827 ?	18540918	18900119
54-	GRANDMOTHER:	SHERIDAN, JANE *		1829 ?	18540918	18851019
55-08	FATHER:	BRADY, JOSEPH AUGUSTUS I		18701214		19210103
54-	GRANDFATHER:	HOGAN, STEPHAN I *		18460214	Twice	19090515
54-	GRANDMOTHER:	FLAGG, MARANDA *		1852 ?	1869 ?	1881 ?
55-07	MOTHER:	HOGAN, MARY DORA		18800216		19540315
56-01	Sister:	Brady, Eva Ray		19030623	19290609	19700809
56-02	SUBJECT:	BRADY, JOSEPH AUGUSTUS II	USA	19050527	19280804	19640626
56-03	Sister:	Brady, Helen Grace		19060823	19311010	19920730
56-04	Sister:	Brady, Alvilda May		19080530	Never	19700927
56-05	Sister:	Brady, Ethel Sheridan		19110121	N/A	19161014
56-06	Sister:	Brady, Gertrude Irene		19130408	19501001	19770728
56-07	Sister:	Brady, Mildred Louise		19151115	19601002	20030909
56-08	Brother:	Brady, Arthur I	USA	19180320	Never	19680101
56-04	WIFE 1st:	TWEED, ALMA GIBSON		19110118	19280804	19940718
57-01	SON:	BRADY, JOSEPH AUGUSTUS III	USAF	19290106	19540704	
57-02	Son:	Brady, William Harrison I	USA	19300228	19530604	
57-03	Daughter:	Brady, June Marie		19330628	19590801	
57-04	Daughter:	Brady, Louise Alma		19360723	19590822	
57-05	Daughter:	Brady, Paula Anne (Twin)		19430113	Twice	
57-06	Son:	Brady, Paul Lee I (Twin)		19430113	19641126	

He left School after his Fathers Death and joined the Merchant Marine, as a Cabin Boy aboard the Lackawanna Valley and sailed the Atlantic and Mediterainian. He then joined the US Army Horse Cavalry, at Cheyenne, WY. Upon his Honorable Discharge, he was Hired as a Truck Driver, at the Fanuel Hall Market, Dorchester, MA. He Married ALMA GIBSON TWEED, the Daughter of WILLIAM HARRISON I and FLORENCE DILLABY (SMITH) TWEED, of Dorchester, MA.

During the Depression, as a Truck Driver for Youngs Novelty Co, Boston, MA, he Moonlighted as a Painter/Wallpaperer. In 1939, he established the Brady Shoppe at the corner of Washington Street and Bowdoin Avenue, Dorchester, MA with his Brother Arthur and Sister Irene. The Store was unsuccessful. After the outbreack of WW II and throughout the Korean Conflict, he was employed, as a Rigger, First Class, at the Charlestown Navy Yard, MA. In the mid 50s, with a Heart Condition, he was Terminated. He re-joined his Brother Arthur, in the Painting /Wallpapering and Minor Home Repair Business, until his Death.

Here was a man who was Well Liked, Well Educated with little Formal Education. A man of High Honor and Character. He believed in Self Sacrifice and "Doing the Right Thing". A very Successful Man, who was never recognized as such. A man who deserves to be Emulated. My Father, God rest his Soul, the Author.

PEDIGREE OF: TWEED, ALMA GIBSON — GENERATION: 56-04
BORN AT: 21 School Street, Dorchester, MA — ISSUED: 20041001
DIED AT: Franvale Nursing Home, Braintree, MA
BURIED AT: Blue Hills Cemetary, Braintree, MA, Sect. 22, Lot 782.

GEN.	STATUS	ANCESTORS/DESCENDANTS		BORN	MARRIED	DIED
54-01	GRANDFATHER:	TWEED, WILLIAM HENRY I	USA	18400817	18690929	19131213
54-05	GRANDMOTHER:	SIMMONS, ELLA SOPHIA		18481002	18690929	19341216
55-04	FATHER:	TWEED, WILLIAM HARRISON I		18800302	19040615	19590929
54-04	GRANDFATHER:	SMITH, REVILLO NEHEMIAH I		18570723	18821109	19251125
54-04	GRANDMOTHER:	LEE, CLARA/CARRIE		18621129	18821109	19351230
55-01	MOTHER:	SMITH, FLORENCE DILLABY		18830823	10040615	19281110
56-01	Brother:	Tweed, Revillo Harrison I		19041218	19331205	19940125
56-02	Sister:	Tweed, Ella Smith		19060903	19280616	19970709
56-03	Brother:	Tweed, Carleton Dillaby I		19080623	19360530	19941101
56-04	SUBJECT:	TWEED, ALMA GIBSON		19110118	19280804	19940718
56-05	Sister:	Tweed, Ruth Caroline		19151209	19330520	19990618
56-06	Sister:	Tweed, Florence Arlene		19190119	N/A	19200809
56-04	HUSBAND 1st:	BRADY, JOSEPH AUGUSTUS II	USA	19050527	19280804	19640626
57-01	SON:	BRADY, JOSEPH AUGUSTUS III	USAF	19290106	19540704	
57-02	Son:	Brady, William Harrison I	USA	19300228	19530604	
57-03	Daughter:	Brady, June Marie		19330628	19590801	
57-04	Daughter:	Brady, Louise Alma		19360723	19590822	
57-05	Daughter:	Brady, Paula Anne (Twin)		19430113	Twice	
57-06	Son:	Brady, Paul Lee I (Twin)		19430113	19641126	

ALMA GIBSON TWEED was Born, Raised, Educated and Married at Boston, MA. She Married JOSEPH AUGUSTUS BRADY II, the Son of JOSEPH AUGUSTUS I and MARY DORA (HOGAN) BRADY, of Dorchester, MA. They Settled at Boston, MA. The Depression would soon begin and her Family would Struggle, as would others.

She did not finish High School, she was Pregnant and gave Birth at Age Seventeen. She was never gainfully employed, remaining at Home, to raise her Children. She was a very difficult woman, Self Centered, Critical and Highly Opinionated. She found it hard to maintain Friendships or get along with others. As a result of her Personality (she made Enemies) the Family moved Annually, until the mid 50s. It was not unussual for the older Children to attend a new School every year. Until just before she was Widowed, the Family Home was at 4 East Street, Bridgewater, MA. There they had Horses, Goats, Chickens and ofcoarse, Cats and Dogs. Alma was an Animal Lover.

She was Widowed, at age Fifty Three and spent the next Thirty Years, in a second Floor Apartment, in the Home of her Daughter, June Marie (Brady) Wilcox, at 172 Pond Street, Randolph, MA. Her Personality was such, that prior to her Death, she Destroyed all Documentation and Photographs, so that by now, this Pedigree and only Official Records are the only Testement to her Existance. She did have Three outstanding Atributes. She was exceptional with Younger Children. She was an Excellent Housekeeper. She was a Great Baker but a lousy Cook. My Mother, May God rest her Soul, the Author.

PEDIGREE OF: BRADY, JOSEPH AUGUSTUS III USAF GENERATION: 57-01
BORN AT: 101 Bowdoin Avenue, Dorchester, MA ISSUED: 20041001
DIED AT:
BURIED AT:

GEN.	STATUS	ANCESTORS/DESCENDANTS		BORN	MARRIED	DIED
55-08	GRANDFATHER:	BRADY, JOSEPH AUGUSTUS I		18701214		19210103
55-07	GRANDMOTHER:	HOGAN, MARY DORA		18800216		19540315
56-02	FATHER:	BRADY, JOSEPH AUGUSTUS II	USA	19050527	19280804	19640626
55-04	GRANDFATHER:	TWEED, WILLIAM HARRISON I		18800302	19040615	19590929
55-01	GRANDMOTHER:	SMITH, FLORENCE DILLABY		18830823	19040615	19281110
56-04	MOTHER:	TWEED, ALMA GIBSON		19110118	19280804	19940718
57-01	SUBJECT:	BRADY, JOSEPH AUGUSTUS III	USAF	19290106	19540704	
57-02	Brother:	Brady, William Harrison I	USA	19300228	19530604	
57-03	Sister:	Brady, June Marie		19330628	19590801	
57-04	Sister:	Brady, Louise Alma		19360723	19590822	
57-05	Sister:	Brady, Paula Anne (Twin)		19430113	Twice	
57-06	Brother:	Brady, Paul Lee I (Twin)		19430113	19641126	
57-01	WIFE 1st:	JAMESON, CLAIRE ELSIE		19310818	19540704	
58-01	Daughter:	Brady, Kathleen Monica		19560504	19791021	
58-02	Son:	Brady, Joseph Augustus IV	USN	19570529	19840714	
58-03	Son:	Brady, Neil Paul I		19590705	19970215	
58-04	Daughter:	Brady, Carol Ann	USAF	19600713	19840324	
58-05	Son:	Brady, Thomas Edward I		19620817	19880909	

JOSEPH AUGUSTUS BRADY III was Born, Raised, Educated and Married at Boston, MA His Paternal American Heritage began with the BRADYs and SHERIDANs (Catholics) who arrived at Boston, MA, in the late 1840s, from Ireland. The HOGANS and FLAGGS (BAPTISTS) who arrived at Norwich, CT, in the mid 1860s, from Canada.

His Maternal American Heritage began with the Pilgrims (Congregationalists) who began arriving at Plymouth Colony, in the Mayflower, in 1620 and the Puritans (Protestants) who began arriving at Salem, MA, in the Winthrop Fleet, in 1627. All of whom Originated in Western Europe and England. This Genealogy is a Testement to his Puritan Heritage, begining with THOMAS TRACY II (Anglican) who arrived at Salem, MA, in April 1636, from Gloucestershire, England.

He is a Boston Trade High School, Lincoln Institute and Northeastern University Graduate, having obtained AME/BBA/MBA Degree's. He joined the US Army Air Corp in 1946, Participating in the Berlin Air Lift and was Honorably Discharged from the USAF, in 1949 and the USAFR, in 1953 and 1957.

He Married CLAIRE ELSIE JAMESON, at Jamaica Plain, MA, the Daughter of NEIL PAUL I and ELSIE SOPHIE (MEYER) JAMESON, of Roslindale, MA.

His Career was Primarily as a Mechanical Design Engineer, for Production, Test and Industrial use. Other Occupations included, Management Consultant, Educational Franchize Owner, NASD Registered Representative, Life Accident and Health Insurance Broker, Chairman of the North Reading Industrial Development Committee, Notary Public and Assistant Governor, TN Society of Mayflower Descendants

PERSONAL PEDIGREE

ANCESTOR TREE

PEDIGREE OF: BRADY, JOSEPH AUGUSTUS III

ANCESTOR TREE: GENERATION: 53- thru 57-01

USAF

GENERATION: 57-01
ISSUED: 20050106

2 Brady, Joseph Augustus II
19050529 - 19640626
19280804, Boston, MA

4 Brady, Joseph Augustus I
Brady, Patrick Joseph
18701214 - 19210103

8 Brady, Patrick I
1828 ? - 18900119

18540918, Boston, MA

9 Sheridan, Jane
1829 ? - 18850919

16 Brady, Thomas I
1799 ? -
, Ireland

17 , Annie

18 Sheridan, William I
1800 ? -

19 , Jane

5 Hogan, Mary Dora
18800216 - 19540315

10 Hogan, Stephan I
Couchon, E'Cheon
18450214 - 19090515

20 Couchon,

, Canada

21

11 Flagg, Maranda
Pepion, Mairance
1852 ? - 1880 ?

22 Pepion,

, Canada

23

3 Tweed, Alma Gibson *
19110118 - 19940718

6 Tweed, William Harrison I *
18800302 - 19590929

19040615, Boston, MA

12 Tweed, William Henry I
18400817 - 19131213

18690929, Boston, MA

13 Simmons, Ella Sophia *
18481002 - 19341217

24 Tweed, Timothy Gibson I
18081112 - 18630126
18391031, Lowell, MA

25 True, Mary Cass
18170118 - 18590623

26 Simmons, William Davis I*
18110203 - 185403
18330208, Plymouth, MA

27 Holmes, Harriet *
18150111 - 18561226

7 Smith, Florence Dillaby
18830823 - 19281110

14 Smith, Revillo Nehemiah I
18570723 - 19251125

18821109, Norwich, CT

15 Lee, Clara/Carrie
18621129 - 19351230

28 Smith, Nehemiah I
18190713 - 18990819
18501125, East Haddam, CT

29 Dillaby, Maria
18310327 - 18850502

30 Lee, Orlando Bridges I
1823 ? - 19050312
18570527, Norwich, CT ?

31 Gaskill, Mary Elizabeth
18280127 - 18940427

32 33 34 35 36 37 38 39 40 41 42 43 44 45 46 47 48 49 50 51 52 53 54 55 56 57 58 59 60 61 62 63

NAME AT BIRTH
SPAN OF LIFE

* MAYFLOWER, DIRECT, by blood, DESCENDANT.

2 FATHER / MOTHER
4 GRAND PARENTS
8 GREAT GRANDPARENTS
16 GREAT, GREAT GRANDPARENTS
32

PEDIGREE OF: JAMESON, CLAIRE ELSIE
BORN AT: Boston Lying-INN Hospital, Boston, MA
DIED AT:
BURIED AT:

GENERATION: 57-01
ISSUED: 20041101

GEN.	STATUS	ANCESTORS/DESCENDANTS		BORN	MARRIED	DIED
55-08	GRANDFATHER:	JAMESON, EDMUND JAMES I (Twin)*		18761010	1900 ?	19531127
55-03	GRANDMOTHER:	SHAND, MARY ELLEN *		1877 ?	1900 ?	19411221
56-02	FATHER:	JAMESON, NEIL PAUL I *		19030913	19310111	19420213
55-	GRANDFATHER:	MEYER, GEORGE JOHN I *		18720608	18990819	19580120
55-07	GRANDMOTHER:	SCHNIEDER, SOPHIE ANN *		18771020	18990819	19500608
56-08	MOTHER:	MEYER, ELSIE SOPHIE		19090126	19310111	20011120
57-01	SUBJECT:	JAMESON, CLAIRE ELSIE		19310818	19540704	
57-02	Sister:	Jameson, Eleanor Joan		19321119	Twice	
57-03	Sister:	Jameson, Phyllis Ann		19340722	19580906	
57-04	Sister:	Jameson, Mary Ellen		19390601	19630720	20040522
57-01	HUSBAND 1st:	BRADY, JOSEPH AUGUSTUS III	USAF	19290106	19540704	
58-01	Daughter:	Brady, Kathleen Monica		19560504	19791021	
58-02	Son:	Brady, Joseph Augustus IV	USN	19570529	19840714	
58-03	Son:	Brady, Neil Paul I		19590705	19970215	
58-04	Daughter:	Brady, Carol Ann	USAF	19600713	19840324	
58-05	Son:	Brady, Thomas Edward I		19620817	19880909	

CLAIRE ELSIE JAMESON was Born, Raised, Educated and Married, at Boston, MA.

Her Mother was Widowed, in 1942 and left with Four Young Girls and no Income. CLAIRE was the Oldest, at Eleven Years Old. The Family was on Government Assistance, thus limiting the Families ability to earn Income. Hard Times were the result, until each Child reached Eighteen Years of Age.

She was Born off Hyde Park Avenue, Roslindale, MA, in a Rented Home. Shortly there after, a Family Home was purchased at 50 Catherine Street, Roslindale, MA, where CLAIRE remained, until her Marriage. She Graduated from Roslindale High School, in 1949 and was then employed by the John Hancock Insurance Co, Boston, MA and then by the New England Telephone and Telegraph Co, Boston, MA. until just prior to the Birth of her First Child. She remained at Home, raising her Family, until the mid 1970s. when she resumed her Working Career, eventually Retiring, as a Secretary, from the Raytheon Co, Andover, MA, in 1989.

She Married JOSEPH AUGUSTUS BRADY III, the Son of JOSEPH AUGUSTUS II and ALMA GIBSON (TWEED) BRADY, of Bridgewater, MA, at St Andrews Catholic Church, Jamiaca Plain, MA. The newly weds occupied an apartment at 257 Cummins Highway, Roslindale, MA and then the Second Floor Apartment of the Brady Family Home, at 308 Talbot Avenue, Dorchester, MA, until they established their own Family Home at 20 Winter Street, North Reading, MA, in 1959, where they remained until Retirement, in 1989, to 1123 Riverbend Drive, LaBelle, FL.

She and her Husband, both Retired, now reside at 630 Sunburst Drive, McMinnville, TN 37110 1-931-507-8964.

PERSONAL PEDIGREE ANCESTOR TREE

PEDIGREE OF: JAMESON, CLAIRE ELSIE

ANCESTOR TREE: GENERATION: 53- thru 57-01

GENERATION: 57-01
ISSUED: 20050106

* Immigrant Ancestor from Hillside, Cape Breton Island, Nova Scotia, Canada.

1 — 19310111, Boston, MA

2 — Jameson, Neil Paul *
19030913 - 19420213

3 — Meyer, Elsie Sophie
19090126 -

4 — Jameson, Edmund James *
18761010 - 19531127

5 — Shand, Mary Ellen *
1879 ? - 19411221

6 — Meyer, George John **
18720608 - 19580129

7 — Schneider, Sophie Ann ***
18771020 - 19500608

8 — Jameson, Neil
18380115 - 190 ?

9 — MacNeil, Sarah
18490508 - 190 ?

10 — Shand, Paul
1845 ?

11 — Vans Burk,
1847 ?

12 — Meyer, Andrus
1840 ?

13 — Graf,
1842 ?

14 — Schneider, Ludwig
18371028 - 19060604

15 — Daubel, Christine
1840 ?

16 — Jameson, Edmund
1805 ?

17 — , Isabella
1806 ?

18 — MacNeil, Michael I
1815 ?

19 — MacNeil, Christie
1819 ?

20 — Shand,

21 —

22 — Vans Burk,

23 —

24 — Meyer,

25 —

26 — Graf,

27 —

28 — Schneider, Josef
1810 ?

29 — Paul, Marghalena

30 — Daubel,

31 —

Hillside, Nova Scotia

Hillside, Nova Scotia

18990819, East Hampton, MA

18621201, Neuburgerwieir, Germany

NAME AT BIRTH
SPAN OF LIFE

** Immigrant Ancestor from Baden Baden, Germany.

*** Immigrant Ancestor from Neuburgerwieir, Rhinestetten, Germany.

2	4	8	16	32
FATHER MOTHER	GRAND PARENTS	GREAT GRANDPARENTS	GREAT, GREAT GRANDPARENTS	

PEDIGREE OF: BRADY, KATHLEEN MONICA — GENERATION: 58-01
BORN AT: Lying-Inn Hospital, Boston, MA — ISSUED: 20050202
DIED AT:
BURIED AT:

GEN.	STATUS	ANCESTORS/DESCENDANTS		BORN	MARRIED	DIED
56-02	GRANDFATHER:	BRADY, JOSEPH AUGUSTUS II	USA	19050527	19280804	19640626
56-04	GRANDMOTHER:	TWEED, ALMA GIBSON		19110118	19280804	19940718
57-01	FATHER:	BRADY, JOSEPH AUGUSTUS III	USAF	19290106	19540704	
56-02	GRANDFATHER:	JAMESON, NEIL PAUL I *		19030913	19310111	19420213
56-05	GRANDMOTHER:	MEYER, ELSIE SOPHIE		19090126	19310111	20011120
57-01	MOTHER:	JAMESON, CLAIRE ELSIE		19310818	19540704	
58-01	SUBJECT:	BRADY, KATHLEEN MONICA		19560504	19791021	
58-02	Brother:	Brady, Joseph Augustus IV	USN	19570529	19840714	
58-03	Brother:	Brady, Neil Paul I		19590705	19970215	
58-04	Sister:	Brady, Carol Ann	USAF	19600713	19840324	
58-05	Brother:	Brady, Thomas Edward I		19620817	19880909	
58-01	HUSBAND 1st:	LUOTO, CARL THOMAS II		19571012	19791021	
59-01	Daughter:	Luoto, Monica Lynne		19800416		
	DIVORCED:	At Plymouth, MA			1997	

KATHLEEN was Born while her Parents lived at 308 Talbot Avenue, Dorchester, MA. In 1959, she was re-located to a new Family Home at 20 Winter Street, North Reading, MA, at the age of Three. In 1974, she graduated from the North Reading School System. In 1976, she graduated from Bunker Hill Community College, Charlestown, MA, with an Associates Degree, as a Legal Secretary.

She Married, CARL THOMAS LUOTO II, the Son of CARL THOMAS I and JUNE EVELYN (AHOLA) LUOTO, of North Reading, MA, at the Lutheran Church of Andover, MA.

For the First Two Years of their Marriage, they rented apartments, in Lawrence, MA, from which their Daughter Monica was Born. In 1982, the Luoto Family moved back into the Brady Family Home, at 20 Winter Street, North Reading, MA, occupying the upper floor, until her Parent retired and the House was sold, in 1990. Eventually, the Luoto Family re-located to Plymouth, MA, again renting apartments. In 1993, they were able to purchase and establish a Family Home, at 8 Alden Street, Plymouth, MA.

In 1997, KATHLEEN obtained a Divorce and retained custody of Monica.

After her Marriage, she held many Part Time Sales jobs but for the most part, she remained at home, for the First Ten Years of Monica's Life. She maintains that raising Monica was One of her most fulfilling accomplishments.

She has been employed, for many years, as a Legal Assistant/Secretary, at a Law Firm, in Plymouth, MA.

Her Family Home has been sold and she has purchased a Condominium in Warham, MA.

PEDIGREE OF: LUOTO, CARL THOMAS II — GENERATION: 58-01
BORN AT: QUINCY, MA — ISSUED: 20070106
DIED AT:
BURIED AT:

GEN.	STATUS	ANCESTORS/DESCENDANTS	BORN	MARRIED	DIED
56-	GRANDFATHER:	LUOTO,			
56-	GRANDMOTHER:				
57-	FATHER:	LUOTO, CARL THOMAS I	19350217	19561222	20000424
56-	GRANDFATHER:	AHOLA,			
56-	GRANDMOTHER:				
57-	MOTHER:	AHOLA, JUNE EVELYN	19370909	19561222	
58-01	SUBJECT:	LUOTO, CARL THOMAS II	19571011	19791021	
58-02	Brother:	Luoto, Richard			
58-02	Sister:	Luoto, Cynthia			
58-04	Brother;	Luoto, Erick			
58-01	WIFE 1st:	BRADY, KATHLEEN MONICA	19560504	19791021	
59-01	Daughter:	Luoto, Monica Lynne	19800416		
	DIVORCED:	At Plymouth, MA		1997	

CARL THOMAS LUOTO II was raised and Married from the Luoto Home at 20 Erwin Road North Reading, MA. In 1975, he Graduated from North Reading High School, North Reading, MA. He attended Merrimac College, Andover, MA, part time for years but never Graduated. His coarse of study was in Finance and Accounting.

He Married 1st, KATHLEEN MONICA BRADY, the Eldest Daughter of JOSEPH AUGUSTUS III an CLAIRE ELSIE (JAMESON) BRADY, of North Reading, MA, at the Lutheran Church, Andover, MA and established a Family Home in Apartments in Lawrence, MA where their only Child was Born. In 1980, The Luoto Family resided in the upper floor of the Brady Family Home at, 20 Winter Street, North Reading, MA. In 1990, with the Retirement of his In-Laws, the home was Sold. They again rented an apartment until they re-located to Plymouth, MA and were able to establish their own Family Home, at 8 Alden Street, Plymouth, MA.

Unfortunately, TOM and KATHI were Divorced, in 1997, at Plymouth, MA. KATHI retained custody of their only Child and the Home.

TOM is an Athlete/Sportsman, he Played Quarterback on the High School Football team and Coached the Pop Warner Football Team, for a number of Years, he is also an Avid Golfer.

He has been employed in the Accounting and Sales Area's of the Athletic Footwear and Golf Industries, for Years. He is currently employed, in a Management Position, with Titlist, the Golf Company, in New Bedford, MA and resides in Fairhaven, MA.

PEDIGREE OF: BRADY, JOSEPH AUGUSTUS IV USN/Ret Generation: 58-02
BORN AT: Lying-Inn Hospital, Boston, MA ISSUED: 20050202
DIED AT:
BURIED AT:

GEN.	STATUS	ANCESTORS/DESCENDANTS		BORN	MARRIED	DIED
56-02	GRANDFATHER:	BRADY, JOSEPH AUGUSTUS II	USA	19050527	19280804	19640626
56-04	GRANDMOTHER:	TWEED, ALMA GIBSON		10110118	19280804	19940718
57-01	FATHER:	BRADY, JOSEPH AUGUSTUS III	USAF	19290106	19540704	
56-02	GRANDFATHER:	JAMESON, NEIL PAUL I *		19030913	19310111	19420213
56-05	GRANDMOTHER:	MEYER, ELSIE SOPHIE		19090126	19310111	20011120
57-01	MOTHER:	JAMESON, CLAIRE ELSIE		19310818	19540704	
58-01	Sister:	Brady, Kathleen Monica		19560504	19791021	
58-02	SUBJECT:	BRADY, JOSEPH AUGUSTUS IV	USN	19570529	19840714	
58-03	Brother:	Brady, Neil Paul I		19590705	19970215	
58-04	Sister:	Brady, Carol Ann	USAF	19600713	19840324	
58-05	Brother:	Brady, Thomas Edward I		19620817	19880909	
58-01	WIFE 1st:	LAYTON, HOLLY MARIE		19610321	19840714	
59-02	Daughter:	LAYTON/BRADY, Brandy Lynne		19800623		
59-03	Daughter:	Brady, Elizabeth Anne		19850907		
59-04	Son:	Brady, Joseph Augustas V		19870925		
	DIVORCED:	At VIRGINIA BEACH, VA			1993	

JOSEPH was Born while his Parents lived at 308 Talbot Avenue, Dorchester, MA. In 1959, he was re-located to a new Family Home at 20 Winter Street, North Reading, MA, at the age of Two. In 1975, he graduated from the North Reading School System. He then enrolled in the USAF-ROTC, at Lowell Institute, Lowell, MA. Learning that there would be no openings for Pilots, upon graduation, he enlisted in the USN, on June 29, 1976, in the career field of Airman, Anti-Submarine Warfare (ASW). In 2000, he retired from the USN, as a Chief Petty Officer, on Flying Status, with Twenty Four Years service.

After a Sea Duty Tour, on the Aircraft Carrier John F. Kennedy, he Married HOLLY MARRIE LAYTON, the Daughter of JOHN FRANKLIN I and DONNA LEE (MORSE) LAYTON, of Wiscassett, ME, at the Nazarene Church, Brunswick, ME. After his Marriage, he Adopted Brandy Lynne Layton, his Wifes Daughter.

While in the USN, he enrolled at Southern Illinois University, at USN Bases. Upon Discharge, he was lacking One Coarse to obtain a Bachelor of Science (BS) Degree, in Workforce Education and Developement. He still doe's not have that coarse, unfortunately.

In 1993, he obtained a Divorce. He retained custody of all Three Children. His ex-wife has since re-married.

He had been employed as a Senior Loan Advisor/Training Manager, in his Brother Neil's Company, Silverstone Mortgage, Inc., Louisville, CO. He now works at a different Mortgage Co. and resides in Brighton, CO.

PEDIGREE OF: GUGLER, KIMBERLY KAY GENERATION: 58-02
BORN AT: Saint Vincents Hospital, Billings, MT ISSUED: 20070106
DIED AT:
BURIED AT:

GEN.	STATUS	ANCESTORS/DESCENDANTS	BORN	MARRIED	DIED
56-	GRANDFATHER:	GUGLER, LAMONT	1909	1940	198101
56-	GRANDMOTHER:	CLEMENTS, HAZEL	1919	1940	
57-	FATHER:	GUGLER, LESTER LAMONT	19400924	19621227	
56-	GRANDFATHER:	MASTERS, DAVID EUGENE	19100206	19311031	196612
56-	GRANDMOTHER:	BARKER, NORA VICTORIA	19141229	19311031	195808
57-	MOTHER:	MASTERS, NORA LOUISE	19440930	19621227	
58-01	Sister:	Gugler, Michelle Ray	19630717	1984	
58-02	SUBJECT:	GUGLER, KIMBERLY KAY	19671210	N/A	
58-03	Brother:	Gugler, Rockwell Jason	19740116		
58-05	COMPANION:	BRADY, THOMAS EDWARD I	19620817	N/A	
59-10	Son:	Brady, Myles Standish	20020705		

KIMBERLY KAY GUGLER was Born and Raised in Billings, MT. She Graduated from Billings Senior High School, Billings, MT, in 1986. She then attended Oregon State University, Corvallis, OR, from 1986 till 1988.

Upon entering College, she had aspirations of studying Medicine and becoming a Doctor. After a year and a half, Both she and her Parents knew that her Grade Point Average was not high enough, for Medical School. She left School and floundered for the next year and a half.

In 1989, she went to Nashville, TN, for a short visit and remained there. In 1990, she enrolled at Vanderbilt University, Nashville, TN and worked full time to put herself through College. In 1992, she Graduated from Vanderbilt University, with a Bachelor of Science, in Industrial Engineering (BS/IE), with a Grade Point Average of 3.0.

She obtained a position with Turner Construction Company, Nashville, TN, as a Field Engineer and was eventually transferred to Memphis, TN, in 1994. In 1996, she had left and obtained a position with Looney Ricks Kiss Architects, Memphis, TN and remained until 1997.

In 1995, she had established a friendship with THOMAS EDWARD BRADY I. By 1997, she and TOM had agreed to become Self-Employed, in their own Business. They established Total Orthotic and Prosthetics Systems, Inc. TOPS, at 300 Sparta Street, McMinnville, TN. TOM was a Certified Prosthetist/Orthotist (CPO).

She purchased a home at 130 East King Street, Morrison, TN where they resided, together, until 2002.

The Business was successful, however, She became pregnant and their Companionship disinegrated. After the Birth of their Son. In 2003, she left the business and TOM left the Home. The business remains successful, however, the Break-up is still unresolved.

PEDIGREE OF: BRADY, NEIL PAUL I
BORN AT: Lying-Inn Hospital, Boston, MA
DIED AT:
BURIED AT:

GENERATION: 58-03
ISSUED: 20050202

GEN.	STATUS	ANCESTORS/DESCENDANTS		BORN	MARRIED	DIED
56-02	GRANDFATHER:	BRADY, JOSEPH AUGUSTUS II	USA	19050527	19280804	19640626
56-04	GRANDMOTHER:	TWEED, ALMA GIBSON		19110118	19280804	19940718
57-01	FATHER:	BRADY, JOSEPH AUGUSTUS III	USAF	19290106	19540704	
56-02	GRANDFATHER:	JAMESON, NEIL PAUL I *		19030913	19310111	19420213
56-05	GRANDMOTHER:	MEYER, ELSIE SOPHIE		19090126	19310111	20011120
57-01	MOTHER:	JAMESON, CLAIRE ELSIE		19310818	19540704	
58-01	Sister:	Brady, Kathleen Monica		19570504	19791021	
58-02	Brother:	Brady, Joseph Augustus IV	USN	19570529	19840714	
58-03	SUBJECT:	BRADY, NEIL PAUL I		19590705	19970215	
58-04	Sister:	Brady, Carol Ann	USAF	19600713	19840324	
58-05	Brother:	Brady, Thomas Edward I		19620817		
58-04	WIFE 1st:	RODRIGUEZ, MARIA EUGENIA SOLANO *		19620612	Twice	
59-05	Step Duagh:	Hernandez, Raquel Simey Solano *		19891001		
59-06	Daughter:	Brady, Brittany Frances		20000119		
59-07	Son:	Brady, Benjamin Paul I		20030808		

NEIL was Born while his Family lived at 308 Talbot Avenue, Dorchester, MA. In 1959, he was re-located to a new Family Home at 20 Winter Street, North Reading MA, at Five days of age. In 1978, he graduated from the North Reading School System. As a graduation present, he was sent to Outward Bound, in the San Juan Mountains of CO and fell in love with the country. He is an Outdoorsman/Adventuror/Entrepenour. By 1979, he enrolloed at the University of MA, Amherst, MA. He attended for a Year and a Half before determining that Wildlife Management was not to be his future career. He then hitch hiked across the country before re-locating to CO, working at Dude Ranches, for sustinance. In 1984, he graduated from the Technical Trades Institute, Colorado Springs, CO, with an Associate Degree, in Electrical Engineering. He was then employed as a Computer Installation/Service Technitian, travelling throughout the country for the next Five Years. He then became an NASD Registered Representative, selling Stocks. Next it was to be a Telemarketer, selling Computer Programs.

It was now time for a change. He bought a Motor home and established an Art/Poster/Production/Marketing Co., Visionary Realism, Inc., with a local prominent Artist and again travelled throughout the country. After Two Years, the Company failed. It was time to fulfill a Dream. He hiked the Appalachian Trail, from Georgia to Maine Now another Dream took hold. He taught himself Spanish and relocated to San Jose, Costa Rica. He established a Telemarketing/Investment Co. Westwind Management, Inc. After another Two Years, this Firm failed. Lessons learned. However, while there, he was to meet his future Wife, whom he would later Marry, in San Jose, Costa Rica.

By 2001, he had established Silverstone Mortgage Co, Louisberg, CO, employing his Brother Joseph and his Niece Brandy. In 2005, the Company Failed and he was forced into Bankruptcy. It seems that he can not learn, Forever a Dreamer.

PEDIGREE OF: RODRIGUEZ, MARIA EUGENIA SOLANO * GENERATION: 58-04
BORN AT: San Juan De Dios Hospital, San Jose, Costa Rica ISSUED: 20061231
DIED AT:
BURIED AT:

GEN.	STATUS	ANCESTORS/DESCENDANTS	BORN	MARRIED	DIED
56-	GRANDFATHER:	CONEJO, VICTOR SOLANO			1957
56-	GRANDMOTHER:	SAABRIA, ELEANOR BARBOZA			
57-	FATHER:	BARBOZA, RODRIGO SOLANO	19080408	19480702	19800324
56-	GRANDFATHER:	GAMBOA, ISAIAS RODRIGUEZ	18921012		
56-	GRANDMOTHER:	RODRIGUEZ, ENGRACIA MELENDEZ	19280623		
57-	MOTHER:	MELENDEZ, CLEMENTIA RODRIGUEZ	19280623	19480702	
58-01	Sister:	Rodriguez, Mayra Cecelia Solano	19500525		
58-02	Brother:	Rodriguez, Rodrigo Enrique Solano	19520614		
58-03	Sister:	Rodriguez, Rosa Maria Solano	19561029		
58-04	SUBJECT	RODRIGUEZ, MARIA EUGENIA SOLANO *	19620612	Twice	
58-	Husband 1st:	Hernandez, Olman Berny Hernandez	19601018	19840224	
59-05	Daughter:	Hernandez, Raquel Simey Solano *	19891001		
	DIVORCED	At San Jose, Costa Rica		1996	
58-03	HUSBAND 2nd:	BRADY, NEIL PAUL I	19590705	19970215	
59-06	Daughter:	Brady, Brittany Frances	20000119		
59-07	Son:	Brady, Benjamin Paul I	20030808		

In 1979, she Graduated from the Mauro Fernandez High School, San Jose, Costa Rica, as an Honor Student. She then enrolled at the University of Costa Rica, San Jose. She had attended for Three and One Half Years, when her Father Died. It became financialy impossible to continue, with her schooling. To help support the family, she had to find work.

She found employment, as a Graphics Designer. Having seen some of her work, I can truthfully say, she has a great deal of Artistic Talent.

In 1996, upon her Divorce, from her First Husband, she retained custody of their Daughter Raquel.

She Married Second, NEIL PAUL BRADY I, the Son of JOSEPH AUGUSTUS III and CLAIRE ELSIE (JAMESON) BRADY, of LaBELLE, FL, at San Jose, Costa Rica.

On April 27, 1998, she and her Daughter Raquel arrived at Louisville, CO, to begin their new future with her Second Husband. They are still in residence.

She is now employed by the Boulder County, Colorado School System, as a Translator/Interpretor. She is ofcoarse, fluent, in both Spanish and English.

SOURCE: MARIA EUGENIA SOLANO (RODRIGUEZ) BRADY.

PEDIGREE OF: BRADY, CAROL ANN USAF/RET GENERATION: 58-04
BORN AT: Lying-Inn Hospital, Boston, MA ISSUED: 20070106
DIED AT:
BURIED AT:

GEN.	STATUS	ANCESTORS/DESCENDANTS		BORN	MARRIED	DIED
56-02	GRANDFATHER:	BRADY, JOSEPH AUGUSTUS II	USA	19050527	19280804	19640525
56-04	GRANDMOTHER:	TWEED, ALMA GIBSON		19110118	19280804	19940718
57-01	FATHER:	BRADY, JOSEPH AUGUSTUS III	USAF	19290106	19540704	
56-02	GRANDFATHER:	JAMESON, NEIL PAUL I *		19030913	19310111	19420211
56-05	GRANDMOTHER:	MEYER, ELSIE SOPHIE		19090126	19310111	20011120
57-01	MOTHER:	JAMESON, CLAIRE ELSIE		19310818	19540704	
58-01	Sister:	Brady, Kathleen Monica		19560504	19791021	
58-02	Brother:	Brady, Joseph Augustus IV	USN	19570529	19840714	
58-03	Brother:	Brady, Neil Paul I		19590705	19970215	
58-04	SUBJECT:	BRADY, CAROL ANN	USAF	19600713	19840324	
58-05	Brother:	Brady, Thomas Edward I		19620817	19880909	
58-12	HUSBAND 1st:	BROCK, TWYMAN LeVOY I	USAF	19590715	TWICE	
59-08	Son:	Brock, Christopher Zackary I		19830119		
59-09	Daughter:	Brock, Caitlyn Ashley Brady		19880121		

CAROL ANN BRADY was Born, Raised and Educated while the Family lived at 20 Winter Street, North Reading, MA. In 1978, she Graduated from the North Reading, MA School System.

She Enlisted in the U S Air Force on Sept. 30, 1979, to begin Active Duty on May 6,1980, thus began her Military Career. She served in Texas, Louisiana, South Carolina, Germany, Korea and Georgia. She was accompanied by her Husband and Children, except in Korea, where she was on Temperary Duty, Twice. She Retired from the U S Air Force, as a Staff Sargeant Medical Technician, on Oct. 31, 2002, with an Honorable Discharge, after Twenty Three Years Service.

She became Pregnant, while on Active Duty, in Mar. 1982 and was Single, at the time. She would Marry Christophers Father, after his Honorable Discharge, from the U S Air Force, in 1984. She Married TWYMAN LeVOY BROCK I, the Son of JAMES ALLIE I and DELPHIA MYRTLE (KING) BROCK, of McMinnville, TN, at Shreveport, LA, as his 2nd WIFE. Being a Single Mother of a Infant, while on Active Duty became untenable. Thus she sent her One Month Old Son to her Parents and Sister, in North Reading, MA, for care. He was returned to her care when he was Ten Months Old and just beginning to walk.

Prior to Retiremant, a Family Home had been established, at Warner Robbins, GA, while her Husband was employed at Fort Benning, GA. Upon Retiremant, she was employed as a Fitting Technician, at her Brother Tom's Business, Total Orthotic and Prosthetic Systems, INC. (TOPS), McMinnville, TN and rented an Apartment from Him, while commuting between Tennessee and Georgia, on Weekends.

In 2006, she returned to the Family Home, in Warner Robbins, GA and is now employed at the Base Hospital, Robbins Air Force Base, GA, as a Receptionist.

PEDIGREE OF: BRADY, THOMAS EDWARD I
BORN AT: Melrose Wakefield Hospital, Melrose, MA
DIED AT:
BURIED AT:

GENERATION: 58-05
ISSUED: 20050202

GEN.	STATUS	ANCESTORS/DESCENDANTS		BORN	MARRIED	DIED
56-02	GRANDFATHER:	BRADY, JOSEPH AUGUSTUS II	USA	19050529	19280804	19640626
56-04	GRANDMOTHER:	TWEED, ALMA GIBSON		19110118	19280804	19940718
57-01	FATHER:	BRADY, JOSEPH AUGUSTUS III	USAF	19290106	19540704	
56-02	GRANDFATHER:	JAMESON, NEIL PAUL I *		19030913	19310111	19420213
56-05	GRANDMOTHER:	MEYER, ELSIE SOPHIE		19090126	19310111	20011120
57-01	MOTHER:	JAMESON, CLAIRE ELSIE		19310818	19540704	
58-01	Sister:	Brady, Kathleen Monica		19560504	19791021	
58-02	Brother:	Brady, Joseph Augustus IV	USN	19570527	19840714	
58-03	Brother:	Brady, Neil Paul I		19590705	19970215	
58-04	Sister:	Brady, Carol Ann	USAF	19600713	19840324	
58-05	SUBJECT:	BRADY, THOMAS EDWARD I		19620817	19880909	
58-01	WIFE 1st:	Hershman, Michelle Marie		19690308	19880909	
	DIVORCED:	At Memphis, TN - Childless			1991	
58-02	COMPANION:	GUGLER, KINBERLEY KAY		19671210	Never	
59-10	Son:	Brady, Myles Standish I		20020705		

THOMAS was Born while the Family lived at 20 Winter Street, North Reading, MA. In 1980, he graduated from the North Reading School System. He later attended One Semester, at the University of MA, Amherst, MA, he determined that College was not for him. He re-located to San Diego, CA.

His early employment centered on Car Repair (he is still a Car Nut). He was working in a garage, at San Diego, CA, when a customer offered him a job, in his Orthotics/Prosthetics Company, as a Technician. He found that he enjoyed working with his hands, using his creative energy and helping people. He also learned that he could not progress beyond Technician, without the proper Education and Experience. He left his job and enrolled at Shelby State College, Memphis, TN, re-locating there, with his future Wife, who's family came from Memphis, TN. He Married Michelle Marrie Hershman, the Daughter of Michael and Carolyn (West) Hershman of Memphis, TN, at Germantown, TN. The Marriage did not survive and they were Divorced, Childless, in 1991, at Memphis, TN.

By 1994, he had obtained Certificates in both Orthotics and Prosthetics and an Associate Degree, in Applied Science. However, he did not have sufficient experience in the Field, to qualify as a Certified Orthotist/Prosthetist, until 1996. He could now start his own business, Total Orthotics and Prosthetic Systems, Inc,, McMinnville, TN, which he did with his then Conpanion, Kimberly Kay Gugler.

The Corporation is successful, however, the Companionship has Soured. After the Birth of their Son, the relationship was dissolved. At this time, the resolution of the Break-up and custody of their Son, is un-resolved.

PEDIGREE OF: BROCK, TWYMAN LeVOY I USAF GENERATION: 58-12
BORN AT: Warren County Hospital, McMinnville, TN ISSUED: 20070106
DIED AT:
BURIED AT:

GEN.	STATUS	ANCESTORS/DESCENDANTS		BORN	MARRIED	DIED
56-05	GRANDFATHER:	BROCK, IRA J. I	(ARRIE)	1887	1907	
56-04	GRANDMOTHER:	HICENBOTON, DORA E.		189102	1907	
57-03	FATHER:	BROCK, JAMES ALLIE I	(ALLEN E.)	19110216	1939	19630228
56-03	GRANDFATHER:	KING, JASPER PAUL I		18580526	TWICE	19260403
56-07	GRANDMOTHER:	ROBERTS, LENORA		18940216	19101022	19630106
57-04	MOTHER:	KING, DELPHIA MYRTLE	(DALTHA)	19220916	1939	
58-01	Sister:	Brock, Trula Joyce		19410317	TWICE	
58-02	Son:	Brock, James Lurtin I		194302		
58-03	Daughter:	Brock, Anna Kristine		194502	TWICE	
58-04	Daughter;	Brock, Clara Belle		19470805		
58-05	Daughter:	Brock, Allie Marie		19490917		
58-06	Son:	Brock, Charles I		19500503	N/A	19500506
58-07	Son:	Brock, Wayne Irvin I	USA	19510728	TWICE	
58-08	Son:	Brock, Alten I	(Twin)	1953	N/A	1953
58-09	Son:	Brock, Alton I	(Twin)	1953	N/A	1953
58-10	Daughter:	Brock, Ruby Ethel		19550322	TWICE	
58-11	Son:	Brock, Wilburn Reed I		19570623		
58-12	SON:	BROCK, TWYMAN LeVOY I	USAF	19590715	TWICE	
58-	Wife 1st:	Verner, Sandra Annette			19770317	
	DIVORCED:	At McMinnville, TN			197803	
58-04	WIFE 2nd:	BRADY, CAROL ANN	USAF	19600713	19840324	
59-08	Son:	Brock, Christopher Zachary I		19830118		
59-09	Daughter:	Brock, Caitlyn Ashley Brady		19880121		

TWYMAN LeVOY BROCK I was Born and Raised at McMinnville and Manchester, TN. In 1977, he Graduated from Manchester High School, Manchester, TN. He also Married his 1st Wife. In 1978, they were Divorced, Childless.

In 1977, he Enlisted in the U S Air Force, as a Medical Technician and in 1983, he was Discharged, Honorably. He then Enlisted in the U S Air Force Reserve, at Arnold Air Force Base, Tullahoma, TN and was again Discharged Honorably, in 1987. He had Served in Texas, Louisiana, Florida and Tennessee. While in the Service, he had met his Future 2nd WIFE, who he Married, after his Active Duty Discharge and the Birth of their First Child. CAROL was a Career Service Woman.

He Married 2nd, CAROL ANN BRADY, the Daughter of JOSEPH AUGUSTUS III and CLAIRE ELSIE (JAMESON) BRADY of North Reading, MA, at Shreveport, LA. He remained with the family throughout his Wifes Deployments, from Louisiana, South Carolina, Germany and Georgia, where she Retired, after 23 Years Service. He is employed at the U S Army, Fort Benning, Martin Hospital, Columbus, GA, where he now lives.

In 1988, he had Graduated from the University of South Carolina, Coastal, Conway, SC with a Bachelor of Science in Business Administration, Finance, BS/BA.

PERSONAL PEDIGREE

ANCESTOR TREE

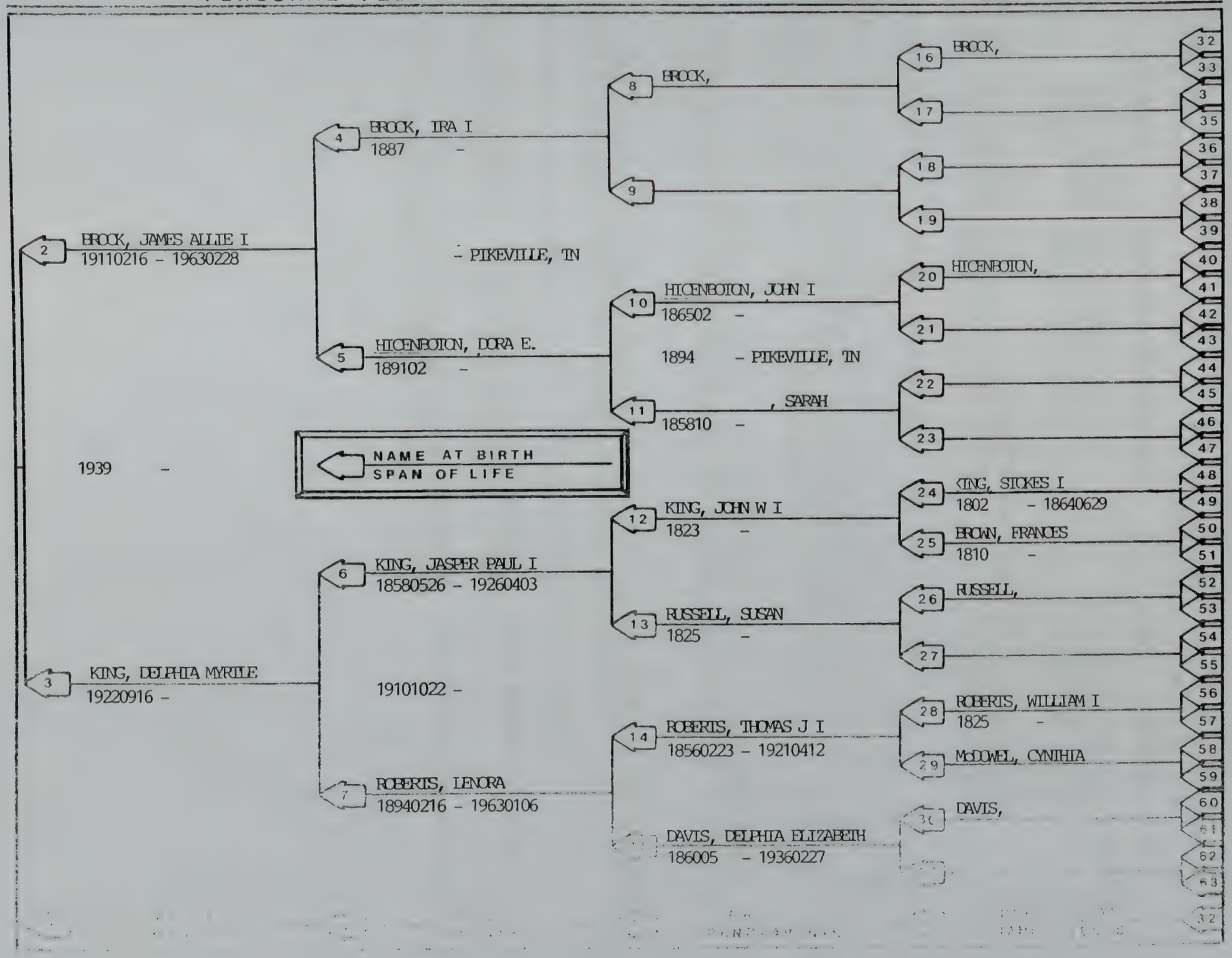

PEDIGREE OF: BROCK, TWYMAN LeVOY I USAF

ANCESTOR TREE: Generation 55 Thru 58-12

GENERATION: 58-12

ISSUED: 20070106

PEDIGREE OF: LUOTO, MONICA LYNNE
BORN AT: MELROSE WAKEFIELD HOSPITAL, MELROSE, MA
DIED AT:
BURIED AT:

GENERATION: 59-01
ISSUED: 20050204

GEN.	STATUS	ANCESTORS/DESCENDANTS		BORN	MARRIED	DIED
57-	GRANDFATHER:	LUOTO, CARL THOMAS I		19350217	19561222	20000424
57-	GRANDMOTHER:	AHOLA, JUNE EVELYN		19370909	19561222	
58-01	FATHER:	LUOTO, CARL THOMAS II		19571011	19791021	
57-01	GRANDFATHER:	BRADY, JOSEPH AUGUSTUS III	USAF	19290106	19540704	
57-01	GRANDMOTHER:	JAMESON, CLAIRE ELSIE		19310818	19540704	
58-01	MOTHER:	BRADY, KATHLEEN MONICA		19560504	19791021	
59-01	SUBJECT:	LUOTO, MONICA LYNNE		19800416		

MONICA is an only Child who was Born while her Parents were living in Apartments, in Lawrence, MA. When she was about Two Years Old, she and her Parents re-located to the Brady Family Home, at 20 Winter Street, North Reading, MA, occupying the upper floor, until her Grandparents both Retired and the house was sold, in 1990.

Eventually, she and her Parents re-located to Plymouth, MA, where they again lived in apartments until a Family Home was finally established, at 8 Alden Street, Plymouth, MA.

She had attended Elementary Schools in North Reading and Plymouth, MA and graduated from Plymouth North High School, Plymouth, MA, in 1998.

Her Parents were Divorced, in 1997, she remained with her Mother.

She was enrolled at Eckerd College, St. Petersburg, FL and graduated with a Bachelor of Arts, in Physical Anthrapology, in 2003.

She was enrolled at the University of South Florida, Tampa, FL and graduated with a Masters Degree, in Library Sciences, in 2006.

PERSONAL PEDIGREE

ANCESTOR TREE

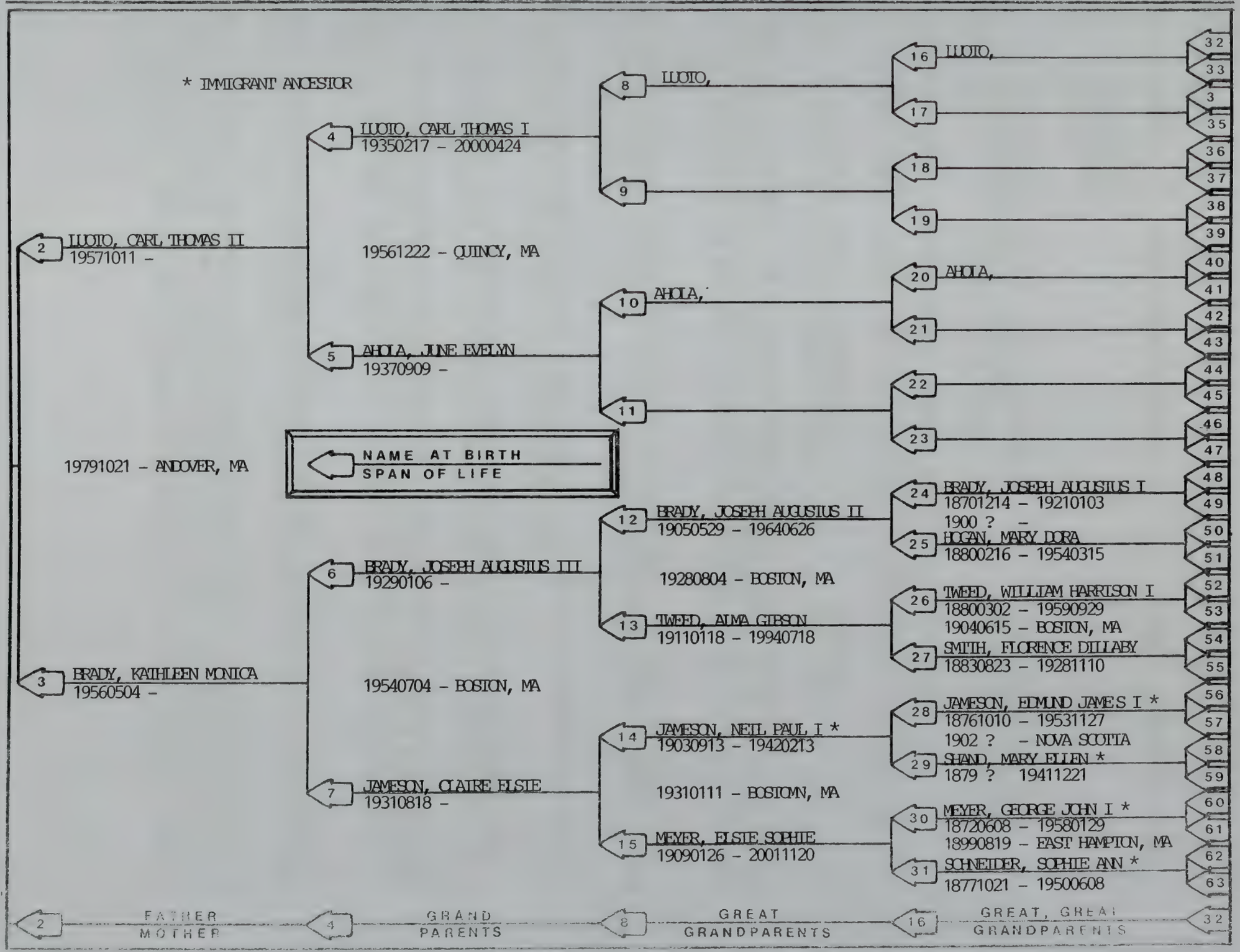

PEDIGREE OF: LUOTO, MONICA LYNNE

ANCESTOR TREE: Generation 55 thru 59-01

GENERATION: 59-01

ISSUED: 20070106

PEDIGREE OF: LAYTON/BRADY, BRANDY LYNNE
BORN AT:
DIED AT:
BURIED AT:

GENERATION: 59-02
ISSUED: 20050203

GEN.	STATUS	ANCESTORS/DESCENDANTS		BORN	MARRIED	DIED
57-	GRANDFATHER:					
57-	GRANDMOTHER:					
58-	FATHER:					
57-	GRANDFATHER:	LAYTON, JOHN FRANKLIN		19400728	19600625	
57-	GRANDMOTHER:	MORSE, DONNA LEE		19420718	19600625	
58-01	MOTHER:	LAYTON, HOLLY MARIE		19610321	Twice	
59-02	SUBJECT:	LAYTON/BRADY, BRANDY LYNNE		19800623		
58-02	ADOPT. FATH:	BRADY, JOSEPH AUGUSTUS IV	USN	19570529	19840714	
59-03	1/2 Sister:	Brady, Elizabeth Ann		19850907		
59-04	1/2 Brother:	Brady, Joseph Augustas V		19870925		

BRANDY is the Daughter of an Un-Wed Mother and a Biological Father, who shall remain un-identified, by request. Her Birth Certificate and place of Birth are not available. She was Adopted by, JOSEPH AUGUSTUS BRADY IV, at about the age of Five.

Her Adoptive Father was a Career US NAVY Chief Petty Officer, who Retired in 2000, after Twenty Four Years Service. She has remained in his household since she was Adopted.

Her Mother and Adoptive Father were Divorced, in 1993. She remained with her Adoptive Father. Her Mother has since Re-Married.

As the Daughter of an Active Duty Serviceman, subject to re-assignment, she moved from Brunswick, ME, to Virginia Beach VA and then to Jacksonville, FL.

She attended Elementary Schools in each of those locations and graduated from Sandalwood High School, Jacksonville, FL, in 1998. She graduated from Florida Community College, Jacksonville, FL, in 2000, having obtained an Associate Degree.

In her Teens, BRADY developed Epilepcy which was thought to be in remission, however, it has since re-emerged. She may no longer drive, even with medication

She was recently employed by Silverstone Mortgage, Inc., Louisville, CO as the Manager of Home Mortgage Processing with her Uncle Neil and her Father. She is now enrolled in a Computer School for Medical Records Processing. She hopes to work from Home, because of her Medical Condition. She resides with her Family, in Brighton, CO.

PEDIGREE OF: LAYTON/BRADY, BRANDY LYNNE
ANCESTOR TREE: Generation 55 thru 59-02

GENERATION: 59-02
ISSUED: 20070106

ANCESTOR TREE

PERSONAL PEDIGREE

NAME AT BIRTH
SPAN OF LIFE

1 LAYTON/BRADY, BRANDY LYNNE
19820625 –

2 LAYTON, HOLLY MARIE
19610312 –

3 LAYTON, JOHN FRANKLIN I
19400726 –

4 19600625 –

5 MORSE, DONNA LEE
19420718

6 GALLANT, MATILDA

7 LAYTON, IRVING

8 MORSE, RICHARD

9 WATSON, GLADIS LEE

10 GREAT GRANDPARENTS

11 GREAT GRANDPARENTS

12 GRAND PARENTS

13 GRAND PARENTS

14 FATHER

15 MOTHER

16 GREAT, GREAT GRANDPARENTS

17 GREAT, GREAT GRANDPARENTS

18 GREAT, GREAT GRANDPARENTS

19 GREAT, GREAT GRANDPARENTS

20 GREAT, GREAT GRANDPARENTS

21 GREAT, GREAT GRANDPARENTS

22 GREAT, GREAT GRANDPARENTS

23 GREAT, GREAT GRANDPARENTS

24 LAYTON,

25

26 GALLANT,

27

28 MORSE,

29

30 WATSON,

31

32 GREAT, GREAT GRANDPARENTS

33

3

35

36

37

38

39

40

41

42

43

44

45

46

47

48

49

50

51

52

53

54

55

56

57

58

59

60

61

62

63

PEDIGREE OF: BRADY, ELIZABETH ANNE
BORN AT: Brunswick, ME
DIED AT:
BURIED AT:

GENERATION: 59-03
ISSUED: 20050202

GEN.	STATUS	ANCESTORS/DESCENDANTS		BORN	MARRIED	DIED
57-01	GRANDFATHER:	BRADY, JOSEPH AUGUSTUS III	USAF	19290106	19540704	
57-01	GRANDMOTHER:	JAMESON, CLAIRE ELSIE		19310817	19540704	
58-02	FATHER:	BRADY, JOSEPH AUGUSTUS IV	USN	19570529	19840714	
57-	GRANDFATHER:	JOHN FRANKLIN		19400728	19600625	
57-	GRANDMOTHER:	MORSE, DONNA LEE		19420718	19600625	
58-01	MOTHER:	LAYTON, HOLLY MARIE		19610312	Twice	
59-02	1/2 Sister:	Layton/Brady, Brandy Lynne		19800623		
59-03	SUBJECT:	BRADY, ELIZABETH ANNE		19850907		
59-04	Brother:	Brady, Joseph Augustas V		19870925		

ELIZABETH was the Daughter of a now Reitired US NAVY, active duty Serviceman, who was subject to re-assignment, during his Service. She had moved with the Family from Brunswick, ME, to Virginia Beach, VA and then to Jacksonville, FL.

She attended Elementary Schools at Virginia Beach, VA, Jacksonville, FL and finally at Legacy High School, Broomfield, CO. where she left school, in the Eleventh Grade.

Her Parents were Divorced, in 1993, she had remained with her Father.

ELIZABETH is a Free Spirit, Street Smart and Immature. She certainly has the means to do the Right Thing but believes she knows far more than she does, an absolute shame. What a Waste.

It is not known where she is in Residence, at the present time. She doe'snt seem to be able to stay put, very long.

PERSONAL PEDIGREE — ANCESTOR TREE

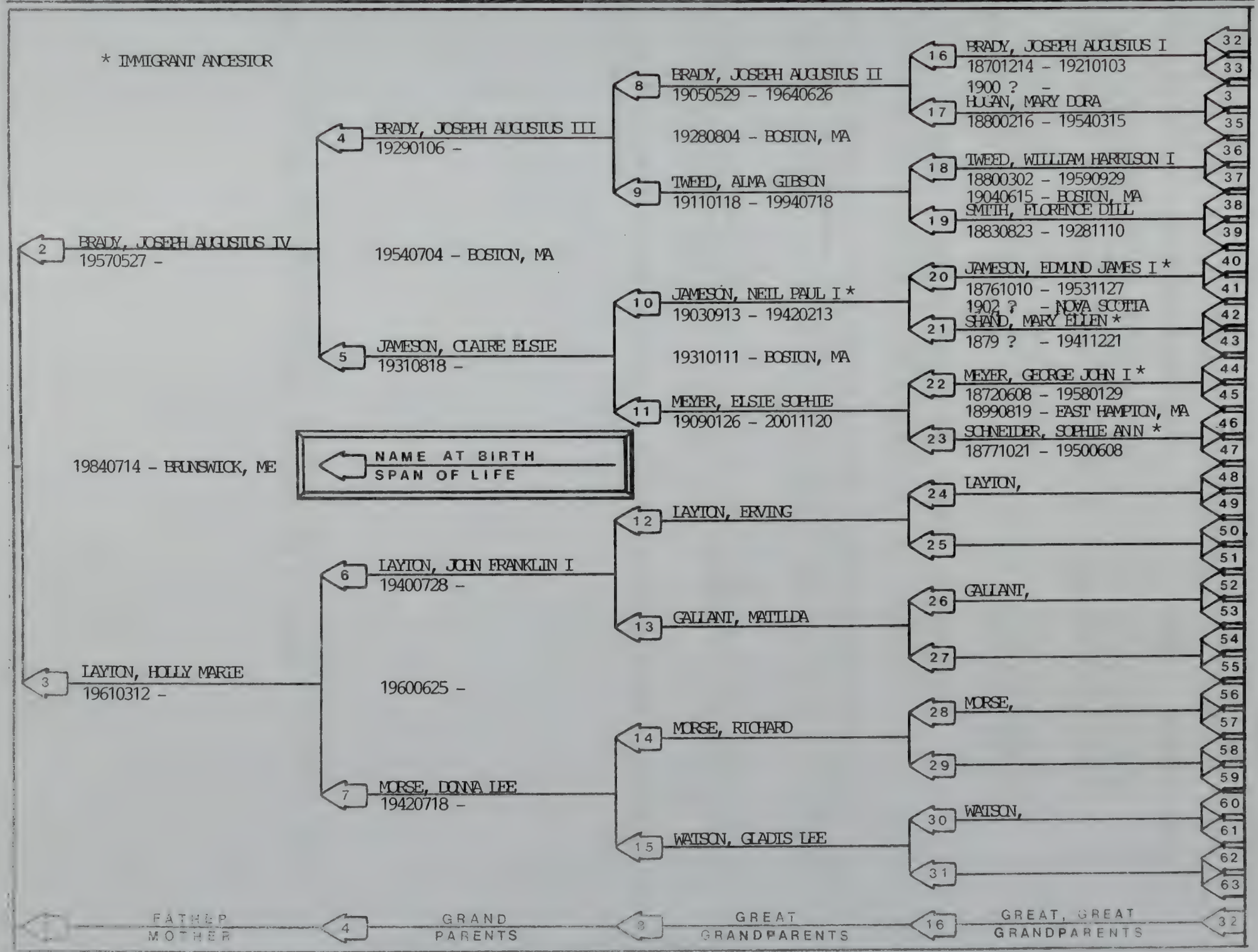

PEDIGREE OF: BRADY, ELIZABETH ANNE
ANCESTOR TREE: Generation 55 thru 59-03

GENERATION: 59-03
ISSUED: 20070106

PEDIGREE OF: BRADY, JOSEPH AUGUSTAS V
BORN AT: Norfolk, VA
DIED AT:
BURIED AT:

GENERATION: 59-04
ISSUED: 20050202

GEN.	STATUS	ANCESTORS/DESCENDANTS		BORN	MARRIED	DIED
57-01	GRANDFATHER:	BRADY, JOSEPH AUGUSTUS III	USAF	19290106	19540704	
57-01	GRANDMOTHER:	JAMESON, CLAIRE ELSIE		19310818	19540704	
58-02	FATHER:	BRADY, JOSEPH AUGUSTUS IV	USN	19570529	19840714	
57-	GRANDFATHER:	LAYTON, JOHN FRANKLIN		19400728	19600625	
57-	GRANDMOTHER:	MORSE, DONNA LEE		19420718	19600625	
58-01	MOTHER:	LAYTON, HOLLY MARIE		19610321	Twice	
59-02	1/2 Sister:	Layton/Brady, Brandy Lynne		19800623		
39-03	Sister:	Brady, Elizabeth Anne		19850907		
59-04	SUBJECT:	BRADY, JOSEPH AUGUSTAS V		19870925		

JOSEPH was the Son of a now Retired US NAVY, Active Duty Serviceman, who was subject to re-assignment, during his Service. He was moved from Virginia Beach, VA, to Jacksonville, FL and is now in residence, with his Father, at Brighton, CO.

He attended Elementary Schools in Virginia Beach, VA and Jacksonville, FL. He will Graduate High School, this Summer. He is currently in Technical High School, in an Automotive Coarse, at Brighton, CO.

His Parents were Divorced, in 1993, He remained with his Father. His Mother has since re-married.

YES, Augustas is spelled correctly, according to his Birth Certificate. It seems, his Father doe's not know how to spell his own Name.

PERSONAL PEDIGREE — ANCESTOR TREE

PEDIGREE OF: BRADY, JOSEPH AUGUSTAS V
ANCESTOR TREE: Generation 55 thru 59-04

* IMMIGRANT ANCESTOR

2 BRADY, JOSEPH AUGUSTUS IV
19570527 -
19840714 - BRUNSWICK, ME

4 BRADY, JOSEPH AUGUSTUS III
19290106 -
19540704 - BOSTON, MA

8 BRADY, JOSEPH AUGUSTUS II
19050529 - 19640626
19280804 - BOSTON, MA

16 BRADY, JOSEPH AUGUSTUS I
18701214 - 19210103
32
33

17 1900 ? -
HUGAN, MARY DORA
18800216 - 19540315
3
35

9 TWEED, ALMA GIBSON
19110118 - 19940718

18 TWEED, WILLIAM HARRISON I
18800302 - 19590929
36
37

19040615 - BOSTON, MA
19 SMITH, FLORENCE DILL
18830823 - 19281110
38
39

5 JAMESON, CLAIRE ELSIE
19310818 -
19310111 - BOSTON, MA

10 JAMESON, NEIL PAUL I *
19030913 - 19420213

20 JAMESON, EDMUND JAMES I *
18761010 - 19531127
40
41

1902 ? - NOVA SCOTIA
21 SHAND, MARY ELLEN *
1879 ? - 19411221
42
43

11 MEYER, ELSIE SOPHIE
19090126 - 20011120

22 MEYER, GEORGE JOHN I *
18720608 - 19580129
44
45

18990819 - EAST HAMPTON, MA
23 SCHNEIDER, SOPHIE ANN *
18771021 - 19500608
46
47

NAME AT BIRTH
SPAN OF LIFE

12 LAYTON, ERVING

24 LAYTON,
48
49

25
50
51

1 LAYTON, HOLLY MARIE
19610312 -

6 LAYTON, JOHN FRANKLIN I
19400728 -
19600625 -

13 GALLANT, MATILDA

26 GALLANT,
52
53

27
54
55

14 MORSE, RICHARD

28 MORSE,
56
57

29
58
59

7 MORSE, DONNA LEE
19420718 -

15 WATSON, GLADIS LEE

30 WATSON,
60
61

31
62
63

1 FATHER / MOTHER — 4 GRAND PARENTS — 8 GREAT GRANDPARENTS — 16 GREAT GREAT GRANDPARENTS — 32

GENERATION: 59-04
ISSUED: 20070106

PEDIGREE OF: HERNANDEZ, RAQUEL SIMEY SOLANO *
BORN AT: Mexico Hospital, Sa Jose, Costa Rica
DIED AT:
BURIED AT:

GENERATION: 59-05
ISSUED: 20050202

GEN.	STATUS	ANCESTORS/DESCENDANTS	BORN	MARRIED	DIED
57-	GRANDFATHER:	DELGADO, ANIBAL HERNANDEZ			
57-	GRANDMOTHER:	HILDALGO, DIVINA HERNANDEZ			
58-	FATHER:	HERNANDEZ, OLMAN BERNY HERNANDEZ	19601018	19640224	
57-	GRANDFATHER:	BARBOZA, RODRIGO SOLANO	19080408	1948	19800324
57-	GRANDMOTHER:	MELENDEZ, CLEMENTIA RODRIGUES	19280212	1948	
58-04	MOTHER:	RODRIGUEZ, MARIA EUGENIA SOLANO *	19620612	Twice	
59-05	SUBJECT:	HERNANDEZ, RAQUEL SIMEY SOLANO *	19891001		
58-03	STEP FATHER:	BRADY, NEIL PAUL I	19590705	19970215	
59-06	1/2 Sister:	Brady, Brittany Frances	20000119		
59-07	1/2 Brother:	Brady, Benjamin Paul I	20030808		

RAQUEL was Born and Raised in San Jose, Costa Rica, until the age of Eight.

She became the Step Daughter of Neil Paul Brady I, upon the Marriage of her Divorced Mother, on Feb. 15. 1997.

She Arrived at Louiseville, CO, with her Mother, to join her new Step Father, on April 27, 1998. Both she and her Mother are Immigrants to the United States.

Although her Mother is fluent in English, she knew little but Spanish, at the time of her arrival, in the United States. She was emersed in a Standard Elementary School, at Louiseville, CO, with Special Help, in the English Language.

This is a very bright, artistic young lady, as is her Mother. It is remarkable how quickly she became fluent, in English. She Will Graduate from Monark High School, Louisville, CO, with the Class of 2007.

PERSONAL PEDIGREE

ANCESTOR TREE

PEDIGREE OF: HERNANDEZ, RAQUEL SIMEY SOLANO *
ANCESTOR TREE: Generation 55 thru 59-05

GENERATION: 59-05
ISSUED: 20070106

2 HERNANDEZ, OLMAN BERNY H
19601018 -

19640224 - SAN JOSE

4 DELGADO, ANIBAL HERNANDEZ

5 HILDALGO, DIVINA HERNANDEZ

3 RODRIGUEZ, MARIA EUGENIA S *
19620612 -

19480702 - COSTA RICA

6 BARBOZA, RODRIGO SOLANO
19080408 - 19800324

7 MELENDEZ, CLEMENTIA R
19280623 -

8
9
10
11
12 CONEJO, VICION SOLANO
- 1957
13 SAABRIA, ELEANOR BARBOZA
14 GAMBOA, ISAIAS RODRIGUEZ
18921012 -
15 RODRIGUES, ENGRACIA M

16 17 18 19 20 21 22 23 24 25 26 27 28 29 30 31

32 33 3 35 36 37 38 39 40 41 42 43 44 45 46 47 48 49 50 51 52 53 54 55 56 57 58 59 60 61 62 63

NAME AT BIRTH
SPAN OF LIFE

2	4	8	16	32
FATHER MOTHER	GRAND PARENTS	GREAT GRANDPARENTS	GREAT, GREAT GRANDPARENTS	

PEDIGREE OF: BRADY, BRITTANY FRANCES
BORN AT: Avista Hospital, Louisville, CO
DIED AT:
BURIED AT:

GENERATION: 59-06
ISSUED: 20050202

GEN.	STATUS	ANCESTORS/DESCENDANTS	BORN	MARRIED	DIED
57-01	GRANDFATHER:	BRADY, JOSEPH AUGUSTUS III USAF	19290106	19540704	
57-01	GRANDMOTHER:	JAMESON, CLAIRE ELSIE	19310818	19540704	
58-03	FATHER:	BRADY, NEIL PAUL I	19590705	19970215	
57-	GRANDFATHER:	BARBOZA, RODRIGO SOLANO	19080408	1948	19800324
57-	GRANDMOTHER:	MELENDEZ, CLEMENTIA RODRIGUEZ	19280623	1948	
58-04	MOTHER:	RODRIGUEZ, MARIA EUGENIA SOLANO	*19620612	Twice	
59-05	1/2 Sister:	Hernandez, Raquel Simey Solano *	19891001		
59-06	SUBJECT:	BRADY, BRITTANY FRANCES	20000119		
59-07	Brother:	Brady, Benjamin Paul I	20030808		

Brittany has just started going to School at Pioneer Elemenary School, Louisville, CO. She will be Graduating High School in the Class of 2019.

PERSONAL PEDIGREE

ANCESTOR TREE

PEDIGREE OF: BRADY, BRITTANY FRANCES
ANCESTOR TREE: Generation 55 thru 59-06

GENERATION: 59-06
ISSUED: 20070106

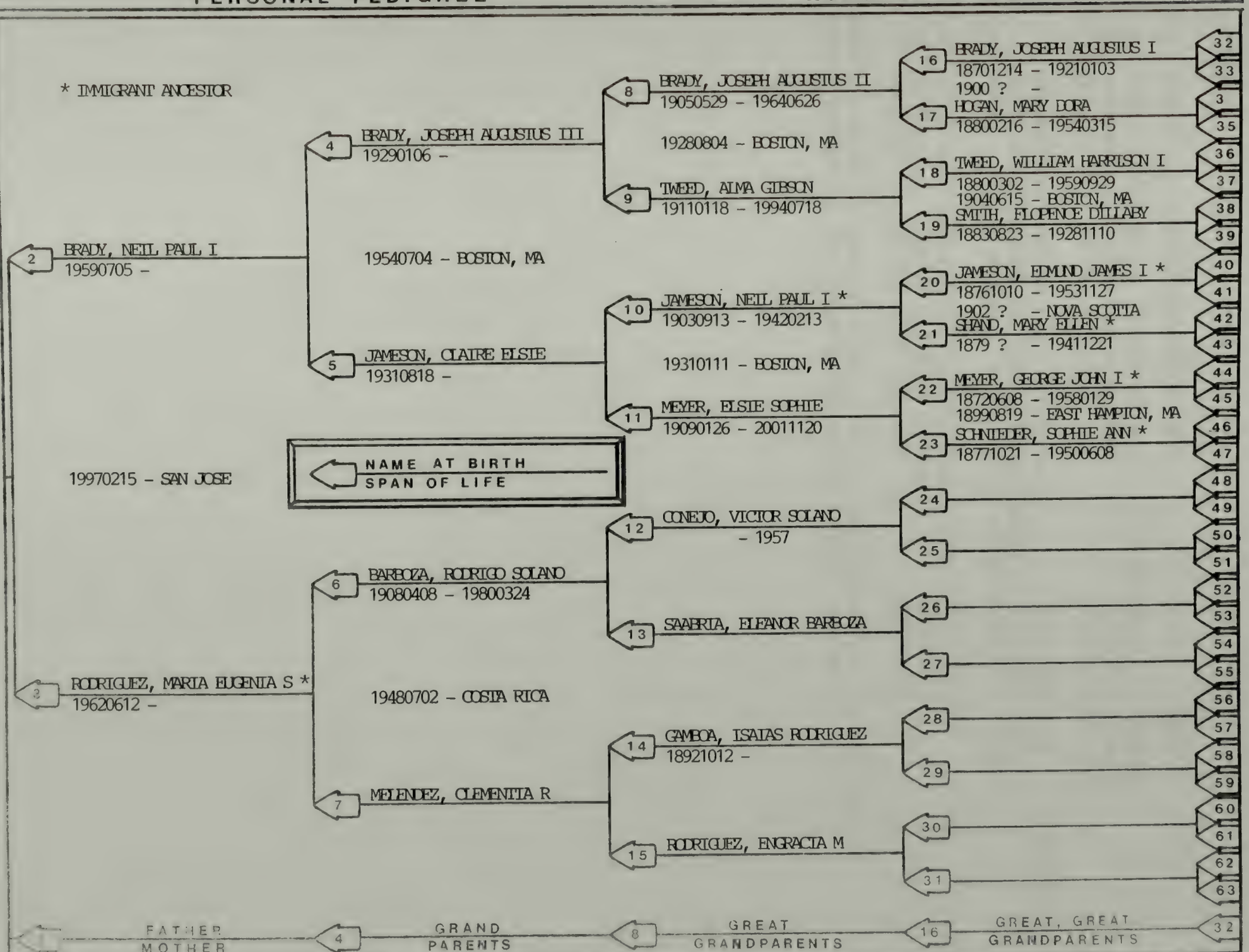

PEDIGREE OF: BRADY, BENJAMIN PAUL I
BORN AT: Avista Hospital, Louisville, CO
DIED AT:
BURIED AT:

GENERATION: 59-07
ISSUED: 20050202

GEN.	STATUS	ANCESTORS/DESCENDANTS	BORN	MARRIED	DIED
57-01	GRANDFATHER:	BRADY, JOSEPH AUGUSTUS III USAF	19290106	19540704	
57-01	GRANDMOTHER:	JAMESON, CLAIRE ELSIE	19310818	19540704	
58-03	FATHER:	BRADY, NEIL PAUL I	19590705	19970215	
57-	GRANDFATHER:	BARBOZA, RODRIGO SOLANO	19080408	1948	19800324
57-	GRANDMOTHER:	MELENDEZ, CLEMENTIA RODRIGUES	19280623	1948	
58-04	MOTHER:	RODRIGUEZ, MARIA EUGENIA SOLANO	*19620612	Twice	
59-05	1/2 Sister:	Hernandez, Raquel Simey Solano *	19891001		
59-06	Sister:	Brady, Brittany Frances	20000119		
59-07	SUBJECT:	BRADY, BENJAMIN PAUL I	20030808		

BENJAMIN has been Diagnosed with a minor case of Autism and is enrolled in a remedial Program at the Fireside Elementary School, Louisville, CO.

PEDIGREE OF: BRADY, BENJAMIN PAUL I
ANCESTOR TREE: Generation 55 thru 59-07

GENERATION: 59-07
ISSUED: 20070106

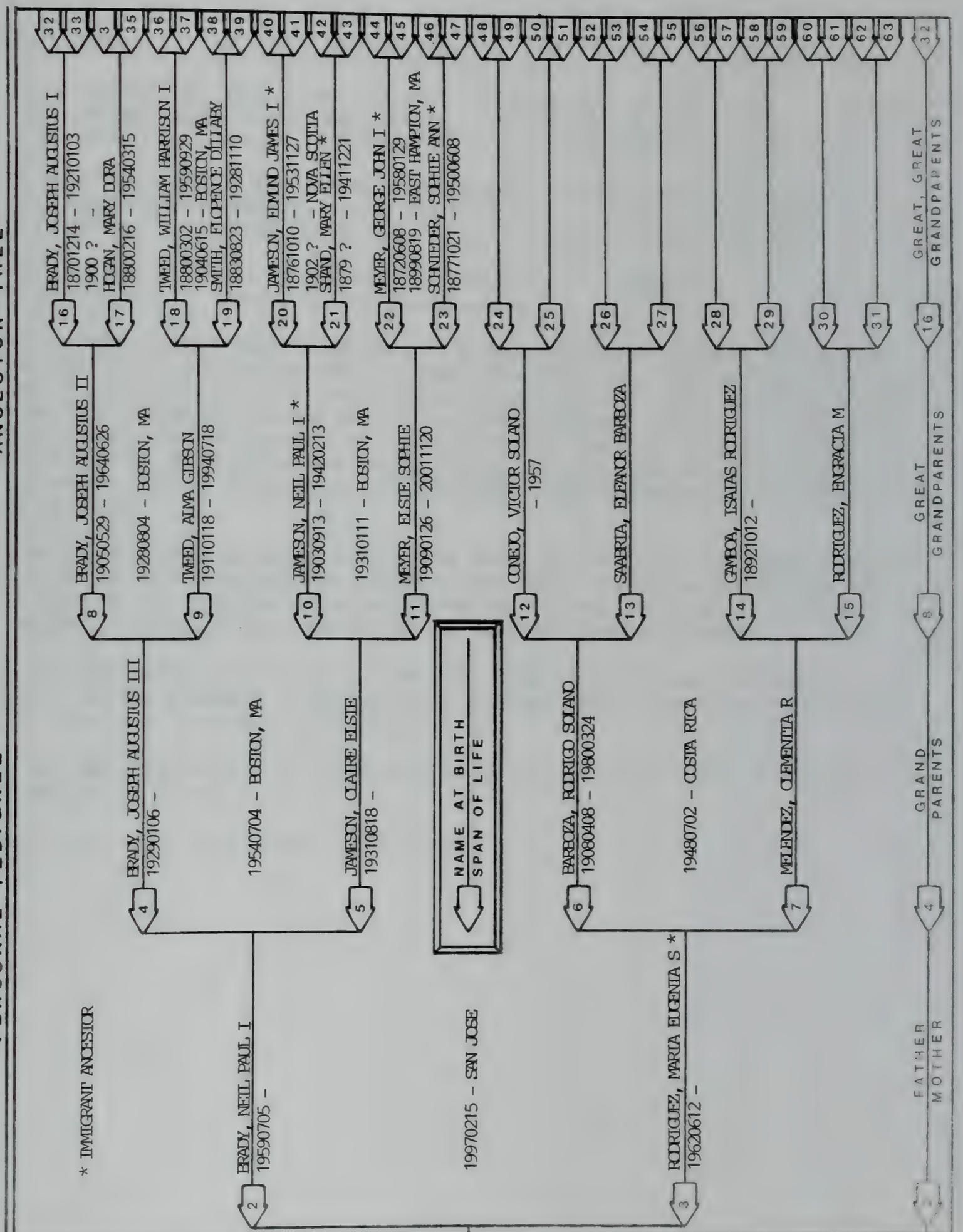

PEDIGREE OF: BROCK, CHRISTOPHER ZACKARY I GENERATION: 59-08
BORN AT: Barksdale Air Force Base Hospital, Shreveport, LA ISSUED: 20070106
DIED AT:
BURIED AT:

GEN.	STATUS	ANCESTORS/DESCENDANTS		BORN	MARRIED	DIED
57-03	GRANDFATHER:	BROCK, JAMES ALLIE I	(ALLEN E.)	19110216	1939	19630228
57-04	GRANDMOTHER:	KING, DELPHIA MYRTLE	(DALTHA)	19220916	1939	
58-12	FATHER:	BROCK, TWYMAN LeVOY I	USAF	19690715	TWICE	
57-01	GRANDFATHER:	BRADY, JOSEPH AUGUSTUS III	USAF	19290106	19540704	
57-01	GRANDMOTHER:	JAMESON, CLAIRE ELSIE		19310818	19540704	
58-04	MOTHER:	BRADY, CAROL ANN	USAF	19600713	19840324	
59-08	SUBJECT:	BROCK, CHRISTOPHER ZACKARY I		19830110		
59-09	Sister:	Brock, Caitlyn Ashley Brady		19870121		

CHRISTOPHER ZACHARY BROCK I was Born to a Career USAF Sevicewoman, who's Father was also in the Active Duty USAF, at that time. They were not Married, at the time of his Birth. Being a Single Mother, alone and with a New Born, in the Service, was un-tenable. He was sent to his Mothers Parents and Sister, for care, at One Month Old. He remained at the Brady Family Home, at 20 Winter Street, North Reading, MA until he was Ten Months Old and was just begining to walk. He was returned to his mothers care, in the USAF. Shortly thereafter his Parents were Married.

He attended Elementary Schools at Myrtle Beach, SC, Semback AFB, Germany, Warner Robbins, GA and Graduated from Warner Robbins High School, Warner Robbins, GA in 2000. He then enrolled at Macon, Cummunity College, part time. He did not complete a coarse of study leading to an Associate Degree, Instead.

He has now transferred to a Full Time Program at the University of Georgia, Athens, GA for a Career in International Business, with a Major in German. He now lives in a Dormitory, on Campus.

He was employed by Winn Dixie Supermarket, for Five Years, prior to entering the University of Georgia.

The Family Home is in Warner Robbins, GA.

PERSONAL PEDIGREE

ANCESTOR TREE

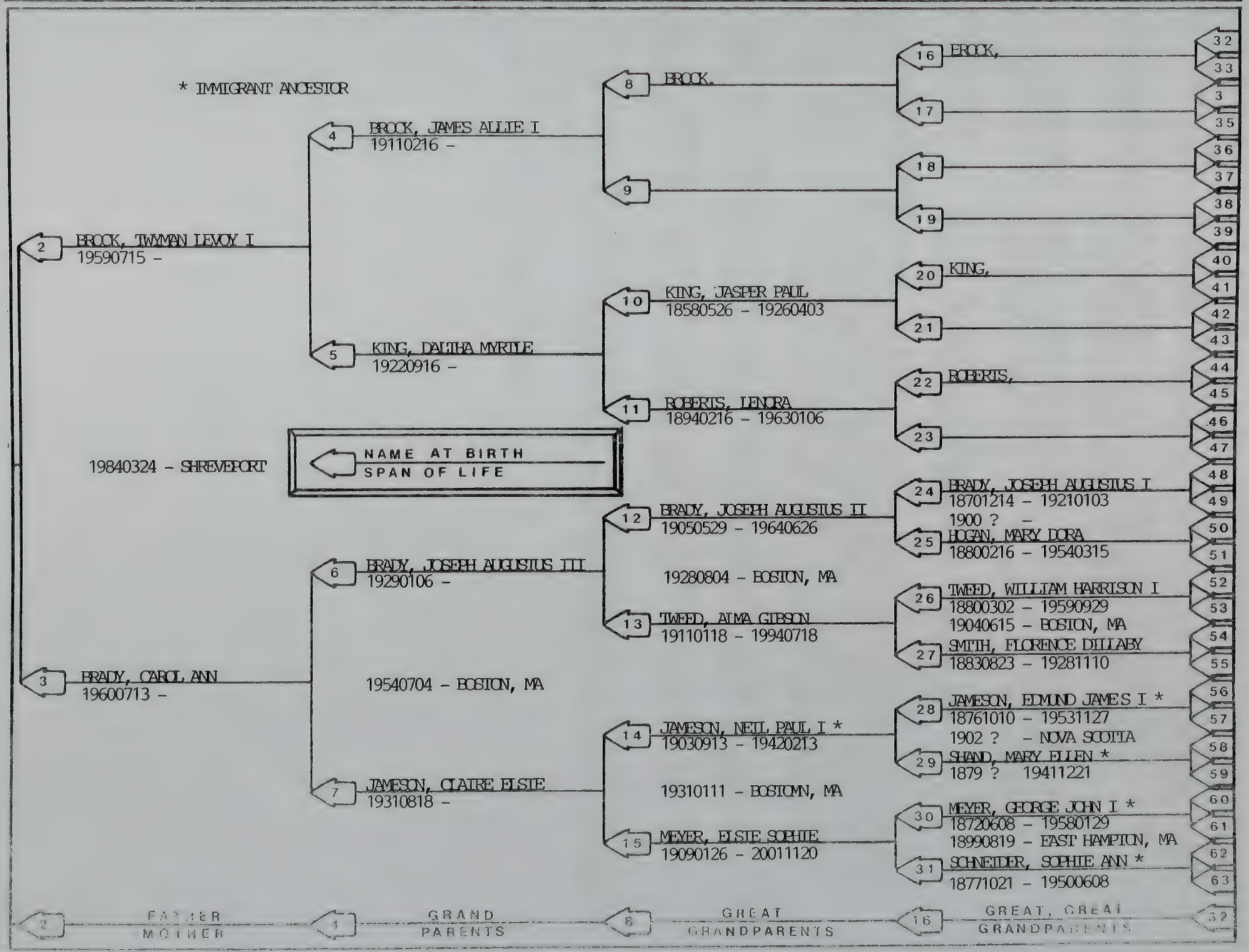

PEDIGREE OF: BROCK, CHRISTOPHER ZACHARY I

ANCESTOR TREE: Generation 55 thru 59-08

GENERATION: 59-08

ISSUED: 20070106

PEDIGREE OF: BROCK, CAITLYN ASHLEY BRADY
BORN AT: Conway Hospital, Conway, SC
DIED AT:
BURIED AT:

GENERATION: 59-09
ISSUED: 20070106

GEN.	STATUS	ANCESTORS/DESCENDANTS		BORN	MARRIED	DIED
57-03	GRANDFATHER:	BROCK, JAMES ALLIE I	(ALLEN E.)	19110216	1939	19630228
57-04	GRANDMOTHER:	KING, DELPHIA MYRTLE	(DALTHA)	19220916	1939	
58-12	FATHER:	BROCK, TWYMAN LeVOY I	USAF	19690715	TWICE	
57-01	GRANDFATHER:	BRADY, JOSEPH AUGUSTUS III	USAF	19290106	19540704	
57-01	GRANDMOTHER:	JAMESON, CLAIRE ELSIE		19310818	19540704	
58-04	MOTHER:	BRADY, CAROL ANN	USAF	19600713	19840324	
59-08	SUBJECT:	Brock, Christopher Zackary I		19830110		
59-09	SUBJECT:	BROCK, CAITLYN ASHLEY BRADY		19870121		

CAITLYN ASHLEY BRADY BROCK was Born to a Career USAF Servicewoman, who was subject to re-assignment and her Civilian Father. Being the Daughter of a Military Service Family, she has re-located, with the Family, from Myrtle Beach, SC, to Alsenborn, Germany and finally to Warner Robinns, GA, where the Family Home is now located and her Mother Retired from the USAF, after 23 Years Service.

She attended Elementary Schools at Semback AFB, Germany and Warner Robbins, GA. In 2006, she Graduated from Warner Robbins High School, Warner Robbins, GA.

As a Young Teenager, some years ago, she was Diagnosed with a Mild Form of Epilepsy which is under control with Medication.

In the fall of 2006, she enrolled at Columbus State College, Columbus, GA, for a Career in International Business, with a Major in Spanish. She resides, on campus, in a Domitory.

The Family Home is in Warner Robbins, GA.

PERSONAL PEDIGREE

ANCESTOR TREE

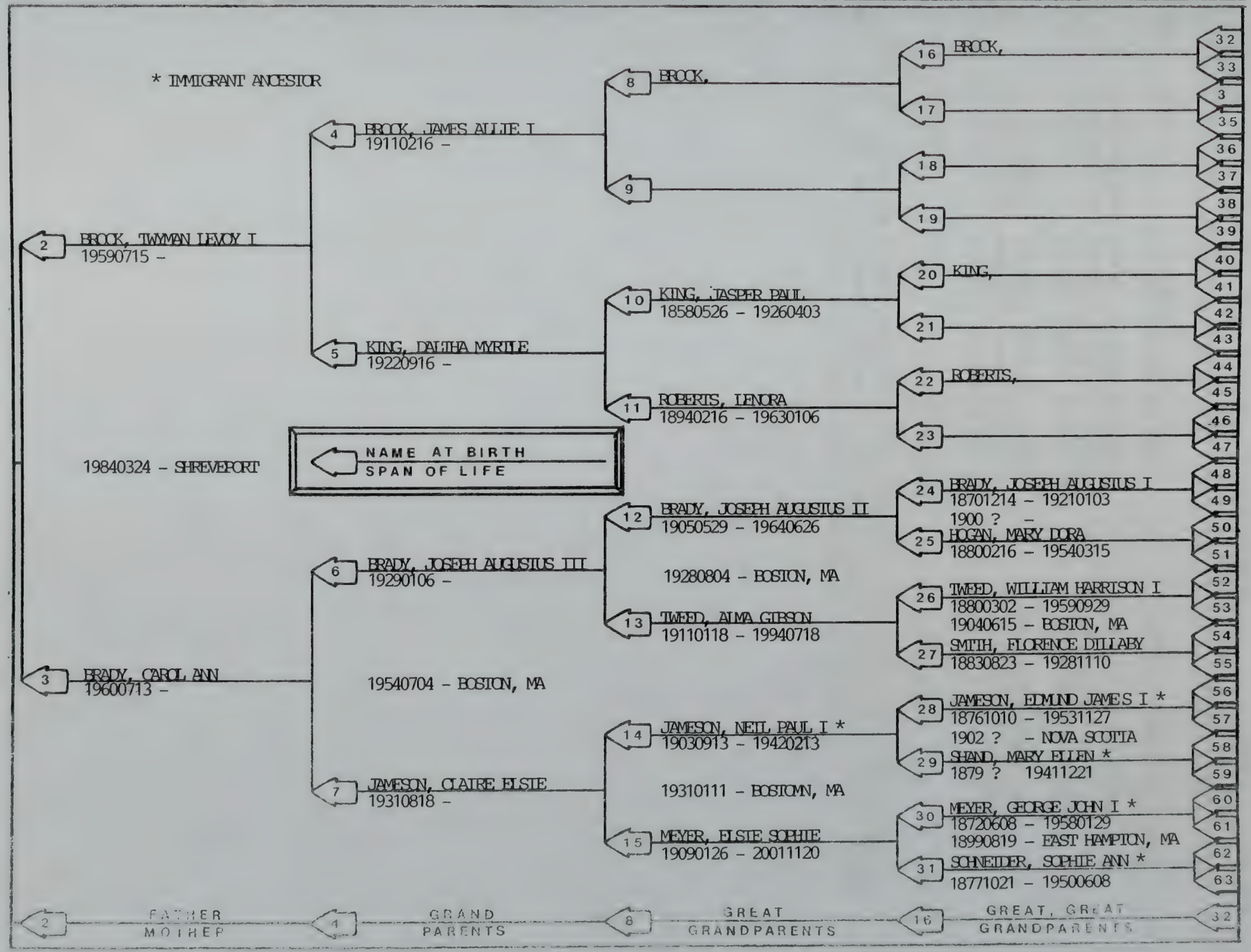

PEDIGREE OF: BROCK, CAITLYN ASHLEY BRADY

ANCESTOR TREE: Generation 55 thru 59-09

GENERATION: 59-09

ISSUED: 20070106

PEDIGREE OF: BRADY, MYLES STANDISH I
BORN AT: Middle TN Medical Center, Murphreesboro, TN
DIED AT:
BURIED AT:

GENERATION: 59-10
ISSUED: 20050202

GEN.	STATUS	ANCESTORS/DESCENDANTS	BORN	MARRIED	DIED
57-01	GRANDFATHER:	BRADY, JOSEPH AUGUSTUS III USAF	19290106	19540704	
57-01	GRANDMOTHER:	JAMESON, CLAIRE ELSIE	19310818	19540704	
58-05	FATHER:	BRADY, THOMAS EDWARD I	19620817	19880909	
57-	GRANDFATHER:	GUGLER, LESTER LAMONT	19400924	19621227	
57-	GRANDMOTHER:	MASTERS, NORA LOUISE	19440930	19621227	
58-02	MOTHER:	GUGLER, KIMBERLY KAY	19671210	Never	
59-10	SUBJECT:	BRADY, MYLES STANDISH I	20020705		

MYLES was Born to a Father and Mother who were not Married. The relationship began, in 1996 and Broke-up, after his Birth, in 2003. He is now in the middle of the Break-up of his Parents relationship which is un-resolved,

PEDIGREE OF: BRADY, MYLES STANDISH I
ANCESTOR TREE: Generation 55 thru 59-10

GENERATION: 59-10
ISSUED: 20070106

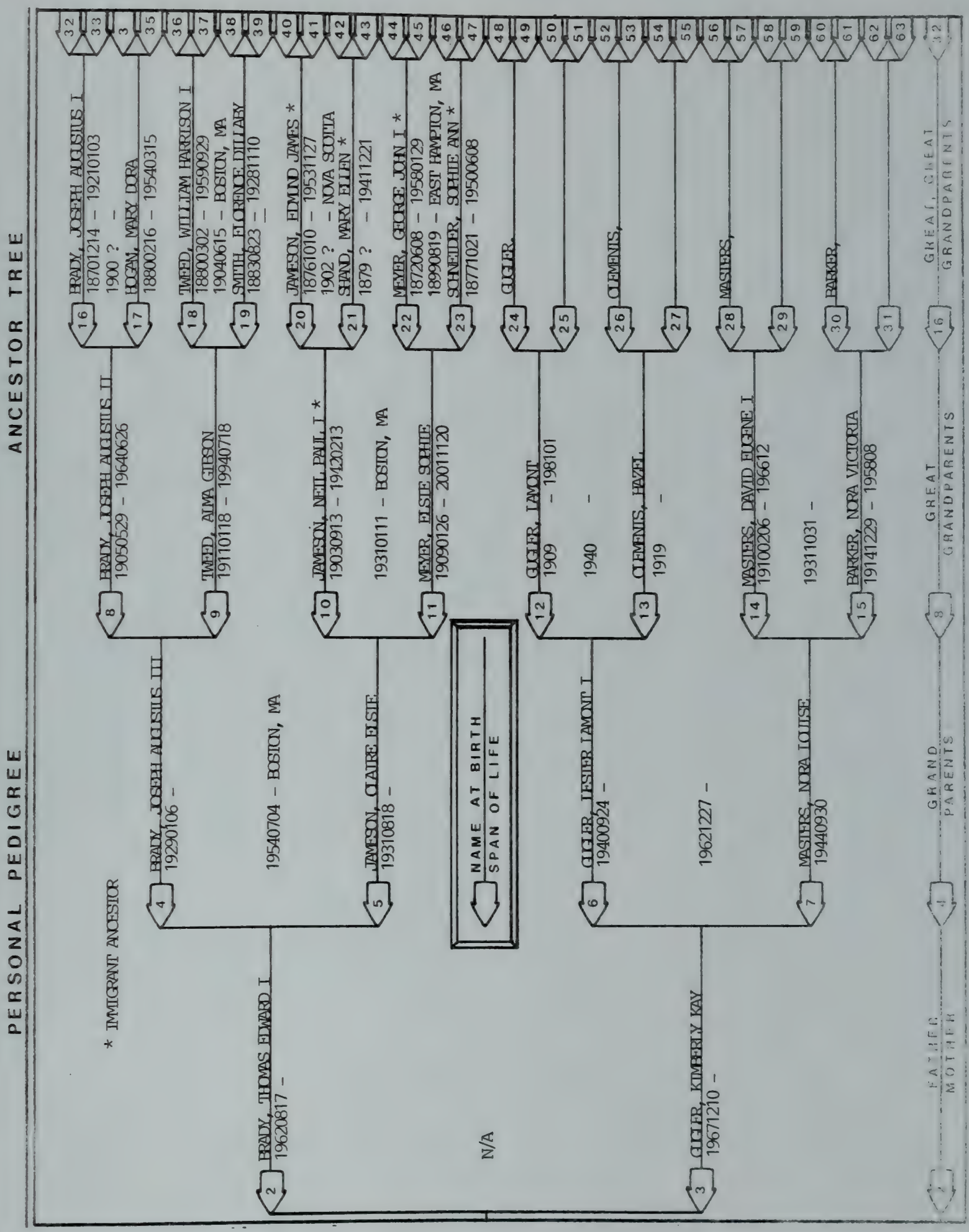

DISTRIBUTION LISTING:

ISSUED: 20060201

The Authors Five Brothers and Sisters.

The Authors Five Children.

The Authors Cousins Jonathan, Robert and Carrie Smith, Alan and Winslow Tweed, Donald Haywood and Kenneth Mulhall.

The Church of Jesus Christ of Latter Day Saints, Family History Library
35 North West Temple Street, Salt lake City, UT 84150

The New England Historical Genealogical Society Library
101 Newbury Street, Boston, MA 02116-3087

The Boston Public Library
Copley Square, Boston, MA

The North Reading Public Library
Bow Street, North Reading, MA 01864

The Magness Memorial Public Library
118 West Main Street, McMinnville, TN 37110

The Norwich Public Library
Norwick, CT 08360

The Lebanon Public Library
Lebanon, CT 06249

The Higginson Book Company
148 Washington Street, Salem, MA 01970

REFERENCES:

The Genealogical Dictionary of the First Settlers of New England
James Savage, Higginson Book Co., Salem, MA, 01970 1860

The Holy Roman Enpire
James Bryce, A. L. Burt, Publisher, New York, NY 1894

The Ancestors o Lieutenant Thomas Tracy of Norwich, CT
ChaRLES Stedman Ripley, Higginson Book Co., Salem, MA 01970 1895

Scottish Clan and Family Encyclopedia
George Way and Romilly Squire, Barnes & Noble Books, New York, NY 1994

The Smith Family Genealogy
Robert Chandler Smith, 519 Quincy Shore Drive, Quincy, MA 02171 1956

The Lee Family Genealogy,
Jonathan Nason Smith, Higginson Book Co., Salem, MA 01970 1996

Henry Madison Research, inc., Early Warning Report
Richard Maybury, PO Box 84908, Phoenix, AR 85071

Bradys mark golden anniversary

The golden wedding anniversary of Mr. and Mrs. Joseph A. Brady III is announced. Brady and the former Claire Jameson met at a dance held at Mosley's in Dedham, Mass., and were married July 4, 1954 in Boston.

The couple have five children including Kathleen Brady Luoto of Plymouth, Mass., Joseph A. Brady IV of Brighton, Colo., Neil P. Brady of Eire, Colo., Carol Brady Brock and Thomas E. Brady, both of McMinnville. They have 10 grandchildren.

The Boston natives have resided in McMinnville for three months. Although Brady served with the U.S. Army Air Force in Germany during World War II, he was fortunate not to have seen any combat duty.

Before retirement, he was employed as an engineer with RCA and his wife was a secretary for Raytheon. Now, she enjoys reading and he devotes his time to geneaology research. Brady is a member of the General Society of Mayflower Descendants and serves as its current assistant general for the State of Tennessee. Therefore, all of his lineal ancestors are direct (by blood) descendants of 19 Mayflower passengers, who sailed to America in 1620.

Photo provided

Mr. and Mrs. Joseph A. Brady III were married in a ceremony taking place July 4, 1954. They recently marked their golden anniversary.